Honeywell
Honeywell Information Systems Italia

DSS 156/157 SUBSYSTEM

TABLE OF CONTENTS
VOLUME 4

This volume is applicable for those productshaving the following product codes :

. 0896484 R - 0896483 U - 0896608 J - 0896609 N

Binder 2", 3 rings

Window

T.o.C. 4.819.2.005.1

Diagnostics :

1 Margining Test 4T4720401E

2 Disc Monitor 4T4720701C

1/5/1974

Honeywell
Honeywell Information Systems Italia

SOTTOSISTEMA DSS 156/157

INDICE DEL VOLUME 4

Questo volume è valido per i prodotti aventi i seguenti codici :

. 0896484 R - 0896483 U - 0896608 J - 0896609 N

Raccoglitore da 2", a 3 anelli

Finestra

Indice 4.819.2.005.1

Diagnostici :

1 Margining Test 4T4720400D

2 Disc Monitor 4T4720700B

1/5/1974

T & D

Honeywell
Honeywell Information Systems Italia

DSS 157 MARGINING TEST

1° APPLIC. 100 LINE

CONT. SU FO. 3 FO. 1

DESCRIPTION		LISTING		CARD	VARIOUS	APPR.
4T4720401E	A0	4T4720409G	A0	4720410S	/	3-XII-71 [illegible]
4T4720401E	A1					74.09.04

NOTE

REVISION

COPIE A: TO:

IND. REV.

COMPIL. C.MONDUCCI/ga

EMISS 22 Feb. 1971

APPR. [illegible]

UNIT

SITE

MC. S.P.S.-HSI

LOC. Frosinone

N° 4T4720401EA01

CONT. SU FO. 3 FO. 1

INDEX

CHAPTER 1 OPERATIVE DESCRIPTION OF THE DSS 157 MARGINING TEST page 6

SECTION 1.1.SUMMARY OF THE OPERATING PROCEDURES " 7

1.1.1. Minimum center configuration " 7
1.1.2. Subsystem in object " 7
1.1.3. Summary of the operations required to run the diagnostic " 9
1.1.4. HLT list " 11
1.1.5. Notes on the parameter card " 15

SECTION 1.2.OPERATING PROCEDURES " 17

1.2.1. General " 17
1.2.2. Validity field " 17
1.2.3. Diagnostic medium " 19
1.2.4. Disc unit and magnetic medium used " 23
1.2.5. Operating procedures " 25
1.2.6. General information on error indication " 39

CHAPTER 2 DSS 157 MARGINING TEST FUNCTIONAL DESCRIPTION " 45

SECTION 2.1.MAIN ROUTINES DESCRIPTION AND FLOW CHART " 47

2.1.1. Seek routine " 47
2.1.2. Return to Home routine " 61
2.1.3. Write routine " 67
2.1.4. Read and compare routine " 73
2.1.5. Repeated seeks routine " 79

SECTION 2.2.DSS 157 MARGINING TEST FLOW CHART page 81

SECTION 2.3.THE TESTS " 93

Tests 1 - 8 " 95
Tests 9 " 97
Tests 10 " 99
Tests 11 " 101
Tests 12 " 103
Tests 13 " 105
Tests 14 " 109
Tests 15 " 113
Tests 16 " 115
Tests 17 " 117
Tests 18 " 123
Test 19 " 129

APPENDIX " 137

CHAPTER 1

OPERATIVE DESCRIPTION OF THE DSS 157 MARGINING TEST

SECTION 1.1. SUMMARY OF THE OPERATING PROCEDURES

1.1.1. MINIMUM CENTER CONFIGURATION

. CPU:

G. 130
G120

. Serial or parallel reader

. Parallel or serial printer

1.1.2. SUBSYSTEM IN OBJECT

The DSS 157 MARGINING TEST can be used for diagnostic purposes with magnetic disc subsystem consisting of :

. Controller : DSC 157 and its derived
. Disc Unit : DSU 167
. Disc Unit : DSU 157 D
. Disc Unit : DSU 157 E

1.1.3. SUMMARY OF THE OPERATIONS REQUIRED TO RUN THE DIAGNOSTIC

- Tool the printer.
- Press CLEAR on CPU.
- Empty the feeding track of the reader.
- Set the diagnostic card deck on the reader and press "OPERATE" (if the reader is a LP 300 B it is necessary to put 2 blank cards at the end of the deck).
- Press LOAD and START on CPU.
- While the program cycles with OPERATOR CALL lit, perform the passage OUT-OF-SERVICE-AUTOMATIC operating on the panel of the printer.
- After the first group of prints, do what they request.
- To the printing requiring to set in AUTOMATIC the disc units under test, turn on the chosen units operating on the console switch START turn on the unit.
- Follow the printing and operate as required.
- The program loaded, to the printing, requiring the insert of the parameter card :
  - Take the card deck off the output stacker;
  - do what the printings request.
- The required test or set of tests finished, the program reaches a program HLT.

  If START is pressed, without SWITCH2 being inserted, the program calls for a new parameter card.

1.1.4. HLT LIST

1.1.4.1. OPERATING HLT'S

HLT 11E8
HLT 14FE
HLT 08B8
HLT 0AAA

Do the operations indicated on the printer

1.1.4.2. ERROR HLT'S

HLT	MEANING	OPERATIONS TO BE PERFORMED
HLT 0025	Card reading error during program loading	CLEAR; Reset the card; OPERATE on the reader START on CPU
HLT 089E (OPERATOR CALL-lit)	The printer does not run the passage OUT-OF-SERVICE/AUTOMATIC within about 3 minutes	Pressing START on CPU, the search is tried again.
HLT 00F8 (OPERATOR CALL-lit)	Printer in STAND-BY or in OUT-OF-SERVICE	Set the printer in AUTOMATIC and press START on CPU
HLT 0AC0 (OPERATOR CALL-lit)	Card reader in STAND-BY	Set the reader in AUTOMATIC and press START on CPU.
HLT 0942 (OPERATOR CALL-lit)	Parameter card reading error	Reset the card; press OPERATE on reader, START on CPU.

HLT	MEANING	OPERATIONS TO BE PERFORMED
HLT 088C	The automatic search of the name of the first DSU has not worked automatically	Do the operation, given on the printer.
HLT 02A2 (OPERATOR CALL-lit)	ERROR HLT of the diagnostic	Check the printings;inserting SWITCH1 and pressing START, the operation which has signaled ERROR is repeated. Pressing START only, the diagnostic performance continues.

1.1.5. NOTES ON THE PARAMETER CARD

By means of the parameter card we can choose the test or set of test to be run.
To recall a test, the corresponding number must be punched over the first two columns of the card.
To run a set of tests the corresponding set of numbers must be punched without interruption (two columns per test)starting from column 1.
The card must be inserted in the hopper when the program loading has been ended, following the instructions given on printer.

Example 1) : The test 03 is to be run

Parameter card :	Col. 1	punch 0
	Col. 2	punch 3

Example 2) : The tests 05 and 11 are to be run

Parameter card :	Col. 1	punch 0
	Col. 2	punch 5
	Col. 3	punch 1
	Col. 4	punch 1

In the case of a parallel reader the parameter cards flow is to be followed by two blank cards.
Such a flow may consist of one parameter card if the tests to be performed are given on a single parameter card, or of several cards if a decision has been taken to perform sequences of groups of tests with recycle possibility, through SWITCH2, on every group.

SECTION 1.2. OPERATING PROCEDURES

1.2.1. GENERAL

The DSS 157 MARGINING TEST is a diagnostic program which stresses the electromechanics and electronics of the disc units through a sequence of tests of increasing hardness in order to obtain the possible highest differentiation of symptoms in order to have a localization of the failures.

1.2.2. VALIDITY FIELD

The disc subsystem must be connected to G 130, G 120 central processors.
It may be connected either directly to a standard CPU connector or after a multiperipheral adapter.
The minimum capacity of the central processor must be 8K.
The input device for the diagnostic program may be either a serial reader which must be connected to connector 2 of the CPU or a parallel reader which must be connected to connector 4.
Both the types of card readers, independently from the type of trascoder, must plan for the by-pass reading.
The type of disc handler planned is DSU 167.
The printer (which must be always present) may be serial or parallel and connected to standard or integrated controller.

1.2.3. DIAGNOSTIC MEDIUM

1.2.3.1. PRELIMINARY OPERATIONS

Extract the first and last card from diagnostic medium. The first card - title card - carries the diagnostic program name.
The last card - summary card - is used when check-up of medium integrity by means of the "Control Program"is required (see pertinet documentation. Check-up must be conducted on the whole medium, excluding the first card only).
The first four cards of the remaining medium act as four different loaders. Pick out the one to be employed as useful loader according to system characteristics and left as front card of the medium.
When selecting the loading-card remember that :

- The card with punching 8 in column 3 is the suitable loader for serial readers with Hollerith code decoder linked through connector 2;
- the card with punching 4 in column 3 is the suitable loader for serial readers with Hollerith code decoder linked through connector 4;
- the card with punching 9 in column 3 is the suitable loader for serial readers with Bull code transcoder linked through connector 2;
- the card with punching 3 in column 3 is the suitable loader for parallel readers with Bull code decoder linked through connector 4.

In the case of parallel reader (LP 300 B) insert two blank cards after the last card of deck.

Remember that the cards extracted from the deck according to what seen above must be filed and easily available.

1.2.3.2. DIAGNOSTIC MEDIUM FORMAT

The diagnostic medium (once the cards mentioned in para. 1.2.3.1. have been removed) consists of 189 cards punched in binary (the loader card excepted).

1.2.4. DISC HANDLER AND MAGNETIC MEDIUM USED

The diagnostic program uses two disc units set in AUTOMATIC. The first disc handler is used to run the whole diagnostic, the second disc handler is used only for the simultaneous test of two units (TEST 18).
Should only one DSU be in automatic status, the above mentioned test will not be run, but it will be possible to run all the other diagnostic tests.
A formatted disc must be assembled on the disc handlers used.
The informations (data) present on disc are altered during the performance of the diagnostic.

1.2.5. OPERATING PROCEDURES

In the following paragraph and in the subsequent ones terms are used, which, will be briefly summarized below :

- to indicate the insertion (or release) of a bistable switch on the CPU panel, the name of the switch is given preceded by SET (or RESET) or INSERT (or RELEASE);
- to indicate a light signal, the name of the lamp is given =1 or =0, respectly if the lamp is on or off.

1.2.5.1. PRELIMINARY OPERATIONS

a) Empty the feeding track of the input device, operating on the related panel.

b) On the CPU panel, perform, in the order, the following operations :

- set LOAD1 or LOAD2 depending whether the input device is connected to connector 2 or to connector 4 of CPU;
- press CLEAR.

c) Set on the hopper the card deck forming the diagnostic and do :

- If serial reader (LS600) it is advisable to set the STOP condition (lamp on) in order to avoid to mix the cards and then press ON and subsequently OPERATE.
- If parallel reader press ON, then press the push button PUNCH (P) so that the lamp stays off.Then press OPERATE checking visually that the feeding of the first card occurs correctly.

d) On the CPU panel press, then, LOAD-START.

1.2.5.2. PROGRAM RUNNING

The program, because of memory occupation reasons, has been divided in 2 sections. Each section is progressively introduced in memory and run. It is not possible to recycle on the whole diagnostic but the recycle is possible on every single section by means of the use of SWITCH2.

1.2.5.2.1. SEARCH FOR THE NAME OF THE PRINTING UNIT

After having introduced the first section, the program is set in a cycle with OPERATOR CALL lit, to establish the printer name.
In order to continue the performance, the operations must be the following:

- if the printing device is already in the AUTOMATIC status, operate on the related panel to perform the passage from AUTOMATIC to OUT-OF-SERVICE, and from OUT-OF-SERVICE to AUTOMATIC.
- If the printing device is in the MANUAL or OUT-OF-SERVICE status, operate on the related panel to perform the passage to the AUTOMATIC status.

Should the operations mentioned above not be done or should the passage OUT-OF-SERVICE/AUTOMATIC of the printer not work, the program execution does not continue and after about 3 minutes an HLT is reached.
In this case, pressing START, the printer name search cycle is repeated.
If the malfunction persists, it is necessary to proceed to repair the printer as it is impossible to continue the program execution.

1.2.5.2.2. NOTICE PRINTS

After having assumed the name of the printer the program performs the following prints :

DSS 157 MARGINING TEST

1) TAKE OFF BOARD A20 ON GUD 030
2) SET OFF ALL THE DISC UNITS
3) LOAD ON THE UNITS FORMATTED DISC. DON'T USE CE DISPAC !
4) PRESS "START".

After these prints the program stops on HLT.
Only when all the operations have been accomplished, proceed pressing START on CPU.

1.2.5.2.3. SEARCH FOR THE NAME OF THE FIRST DSU UNIT

The search for the unit name is done automatically by the program.
In fact, after having given on printer the following order :

SET IN AUTOMATIC THE CHOSEN DSU'S

it passes to a program cycle which examines progressively all the possible names of the unit under test.
The program assumes as first unit under test the one which, shows the passage from the OUT-OF-SERVICE or MANUAL STATUS to the AUTOMATIC one.
If the unit name search fulfills the above mentioned condition, the program is continued (see printing of the name of the disc handler under test) .
However there are some failures (selection network and decoding of unit name, malfunctions in the signal of MARE or SECO, etc.) which do not allow the automatic search of unit name.

In this case, the program, after having cycled for a maximum time of about 3', runs the following prints:

THE AUTOMATIC SEARCH OF UNIT NAME DIDN'T WORK.

IF THE UNIT NAME IS "OX" INSERT SWITCH 1 AND PUSH START BUTTON.
OTHERWISE PUSH START BUTTON.

The operator must perform what requested from printer. Let's set for example that the name of the unit under test is 10. The sequence of the prints occurs in the following way:

IF THE UNIT NAME IS "1X" INSERT SWITCH 1 AND PUSH START BUTTON
OTHERWISE PUSH START BUTTON.

At this point, the operator must insert SWITCH1. This prints will follow:

RELEASE SWITCH 1

IF THE UNIT NAME IS "10" INSERT SWITCH 1 AND PUSH START BUTTON
OTHERWISE PUSH START BUTTON

As said, the unit under test has the name 10 and then the operator, checked the coincidence between the printing and the real name, will insert again SWITCH1 and will press START.
The following prints will be:

RELEASE SWITCH 1
THE NAME OF THE FIRST DSU IS 10

This last printing is reached directly if the unit name search works automatically.

1.2.5.2.4. SEARCH FOR THE NAME OF THE SECOND DSU

The program proceedes to the search for the names of the remaining DSU'S set in AUTOMATIC.
After a 15" (0" if the first unit's name has been found not automatically) the program checks the status of all the DSU (by inspecting the MARE and SECO conditions) and prints a table reassuming the subsystem status :

Example :

UNITS IN AUTOMATIC : 10, 12,16
UNITS OUT OF SERVICE : 11, 13, 14, 15, 17,

The first name of the first list (UNITS IN AUTOMATIC) is the one found as described in para. 1.2.5.2.3.
The program assumes as first and second DSU under test those units whose names appear respectively in first and 2nd position in the list of the units in automatic.
Should only one unit be in automatic, TEST 18 will not be executed.
As the program goes on the following prints occur :

CHECK THE PRINTINGS. IF CORRECT PRESS "START" TO RECYCLE
PRESS "SW.2" AND "START".

And an HLT is reached.
After having checked if all the prints made are correct, press START, otherwise inserting SWITCH2 and pressing START, the section is repeated (the search for the printer name is excluded from the recycle).

1.2.5.2.5. RUNNING OF THE TESTS

At the end of the program loading the following printing appears :

ATTENZIONE! - WARNING! - ATTENTION!

INSERT PARAMETER CARD

IN ABSENCE OF PARAMETER CARD EVERY "START" WILL BE EXECUTED.
PREMERE "START" - PRESS "START" - PRESSER "START"

and the program reaches an HLT.
At this point, it is necessary:

- to check whether the feed track is empty;
- to take the diagnostic deck from the output stacker in order to avoid mixing the diagnostic deck cards with the parameters ones;

To run the whole set of tests press "START".

To run one or more particular tests, insert the parameter card punched as seen in par. 1.2.5., put the reader in OPERATE and press START.
The program runs the chosen tests.
When the tests are run the following printing appears:

TO REPEAT THE CHOSEN SET OF TESTS PRESS "SW. 2" AND "START"
TO TRY NEW SET OF TESTS INSERT A NEW PARAMETER CARD PUT THE READER IN "OPERATE" AND PRESS "START".

and the program reaches an HLT.
If SWITCH2 is inserted, pressing START, the program runs continuosly the chosen set of tests.
To run a new set of tests insert a new parameter card in the reader, put the same in OPERATE and press START.

1.2.6. GENERAL INFORMATION ON ERROR INDICATIONS

The error signal occurs through printing and the program stops at the HLT with OPERATOR CALL lit.
Pressing START, the diagnostic program run is continued.
Inserting SWITCH1 and pressing START there is the repetition of the operation which has signaled error.
Such operation is repeated continuously until SWITCH1 is not released.
The stop on HLT and the error signal printings are avoided in case of recycle on SWITCH 1.

Examples :

1. PRINTING FOR AN ERROR IN THE CONDITION EXAM

TEST N.09 CY.N. 202 HEAD N.02 SECT. 0,1
EGOLT 0 *

Note : The value 0 or 1 printed beside the name of the signal examined, indicates the situation of the signal itself to the interface

0 = condition present (signal electrically low on the interface)

1 = condition not present (signal electrically high on the interface)

The signals with * are the cause of error.

Test 09 working, during the execution of an operation (write or read) concerning cylinder 202, head 02, sectors 0,1 the condition EGOLT = 0 has occurred.

2. PRINTING BECAUSE OF POSITIONING ERROR

2.1. TEST N.05 N. 064 STEPS FROM CY.N. 100 TO CY.N.164 HEAD N.00
ERROR FOUND CY.N.100 HEAD N.01

Interpretation.

A 64 steps positioning, from cylinder n.100 to cylinder 164, should have been performed.
The Home Address reading, made with head 00, should have checked the position reached.
According to this reading, the cylinder found is n. 100 and the head selected is n.01.

2.2. TEST N.06 N.128 STEPS FROM CY.N.010 TO CY.N. 138 HEAD N.00
MARET *

The interpretation is like the one seen sub point 2.1. however here the condition MARET = 0 has occured.

3. PRINTING BECAUSE OF RETURN TO HOME ERROR

ERR. IN RET. TO HOME FROM CY.N. 000
ERROR FOUND CY.N. 202
IF SW.1, RET. TO HOME IN CYCLE

Interpretation.

A Return to Home should have been performed.
The Home Address reading has shown that the unit has reached cylinder 202 instead of cylinder 000.
If SWITCH1 is inserted, pressing START, the program performs Return to Home's continuosly.

4. PRINTING FOR COMPARISON ERROR BETWEEN CHARACTERS PRESENT IN MEMORY (CORRECT) AND CHARACTERS INTRODUCED FROM DSU

TEST N. 09 CY.N. 202 HEAD N.02 SECT.N.0,1

chrts read TO MEM 0000000000000000000000000000000000000000000000

chrts in memory IN MEM 5555555555555555555555555555555555555555555555

5. PRINTING BECAUSE OF ERROR DURING TEST 19

TEST N 019 SEEK INCOMPLETE

TESET 1 CY.N. - 002

CHAPTER 2

DSS 157 MARGINING TEST
FUNCTIONAL DESCRIPTION

SECTION 2.1. DESCRIPTION AND FLOW CHART OF THE MAIN ROUTINES

2.1.1. POSITIONING ROUTINE

The subroutine accomplishes the required positioning, it checks the machine status at the end of the positioning itself, it checks the position reached.
The information, related to the positioning to be done, are contained in a 4 character field which follows immediately the instruction of jump to the subroutine and which has this format.

1St character : AB

1St semicharacter A = 0 the check on the position reached is accomplished through the reading of the Home Address of track 0.

F the check on the position reached is accomplished through the reading of the Home Address of all the tracks of the cylinder.

2nd semicharacter B = 0 reverse positioning

1 forward positioning

2nd character NN : number of steps to be done

3rd character DD : cylinder to be reached

4th character : always at 0

If an error occurs a signal is given out from the print and an HLT is reached.
Pressing START without SW.1 inserted, the subroutine goes to the following test.
With SW.1 inserted the operations performed vary with the type of error :

- If, once the positioning has been performed, the "seek incomplete" (TESET) signal arises, or if, in the immediately subsequent phase of headers reading, the MARET condition (positioning beyond cylinders 000-202) occurs a "Return to Home" is accomplished, with subsequent repositioning on the starting cylinder; after this the positioning is tried again.

- If the cylinder number read is different from the number of the cylinder to be reached, the starting cylinder is reached and the positioning is tried again.
  Until the SW.1 is inserted, also in case of correct performance, the recycle on the positioning which has given error occurs again.
  When the check on the position reached is done by reading the "Home Address" of all the tracks of the cylinder reached, the subroutine, in addition, accomplishes a check on the track indicators, storing the numbers of possible faulty or alternative tracks.

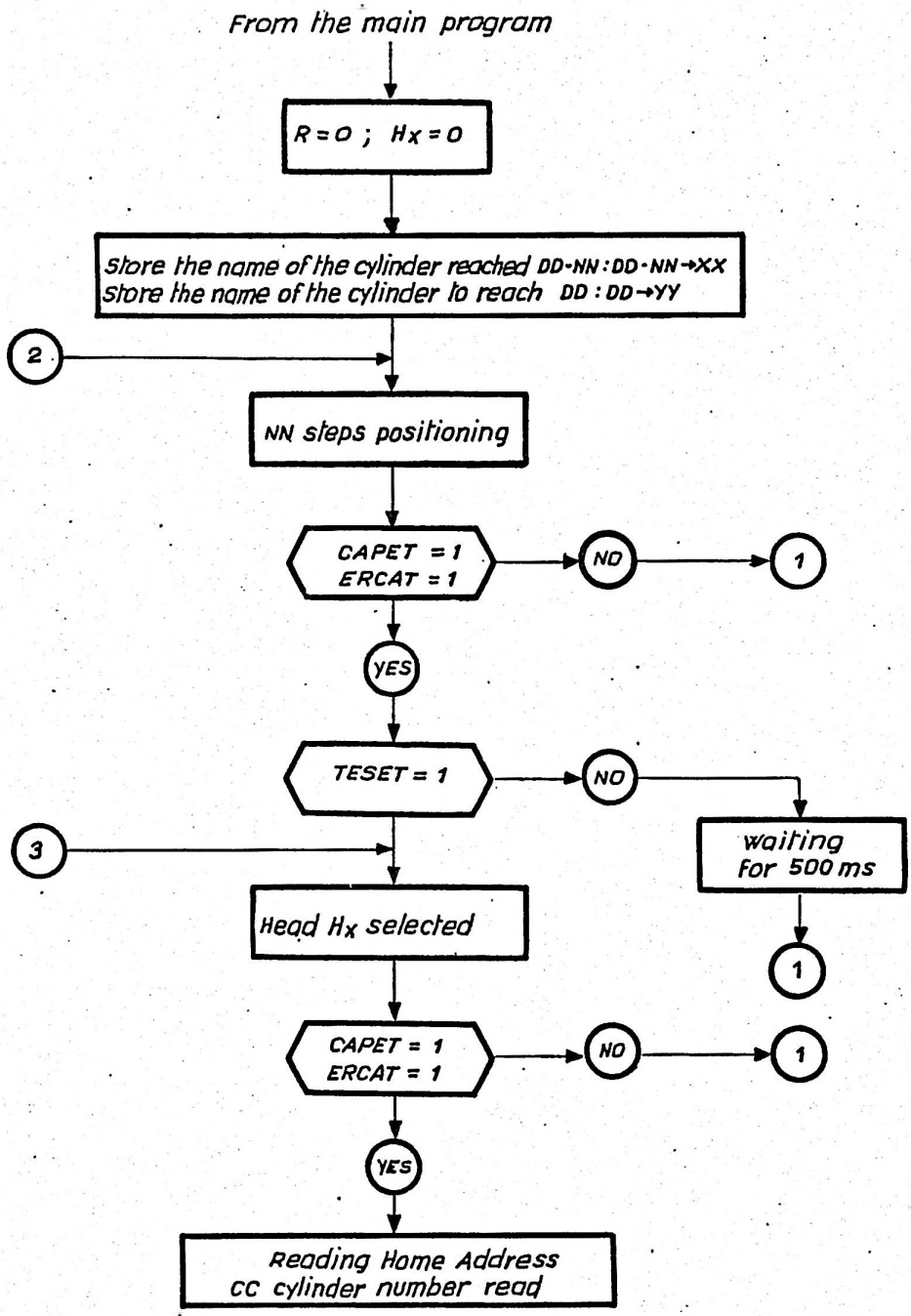

R : Indicator
R = 0 : No recycle
R = 1 : Recycle

Honeywell
Honeywell Information Systems Italia

DSS 157 MARGINING TEST

100 LINE

1° APPLIC.

CONT. SU FO. 55 FO. 53

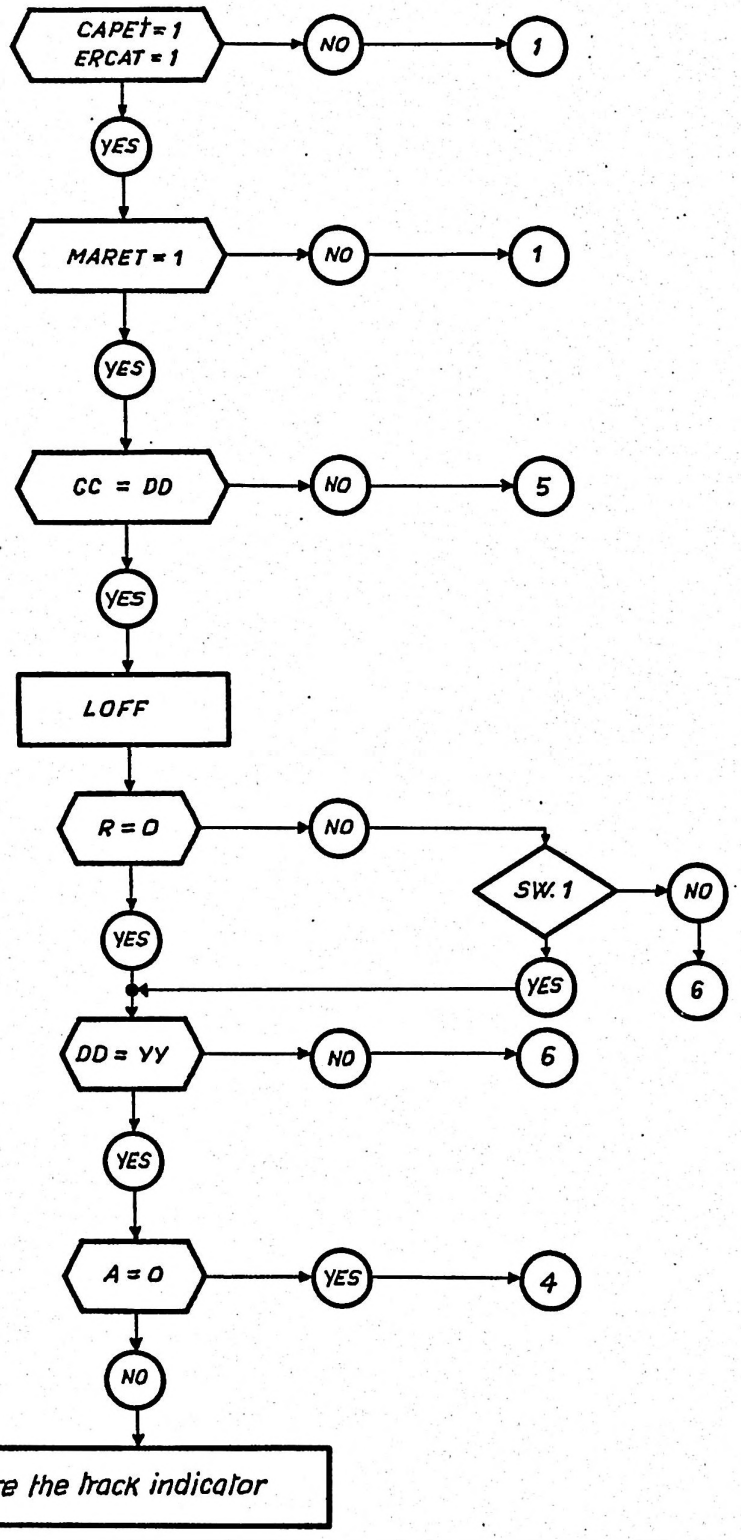

COPIE A : TO :

IND. REV.

REVISION

COMPIL. C. MONDUCCI/aa	APPR.	UNIT SEZ. SEC. S.P.S HISI	N° 4T4720401EA0
EMISS. 22 Feb. 1971		LOC. PREGNANA	CONT. SU FO. 55 FO. 53

Cod. 3896128 F

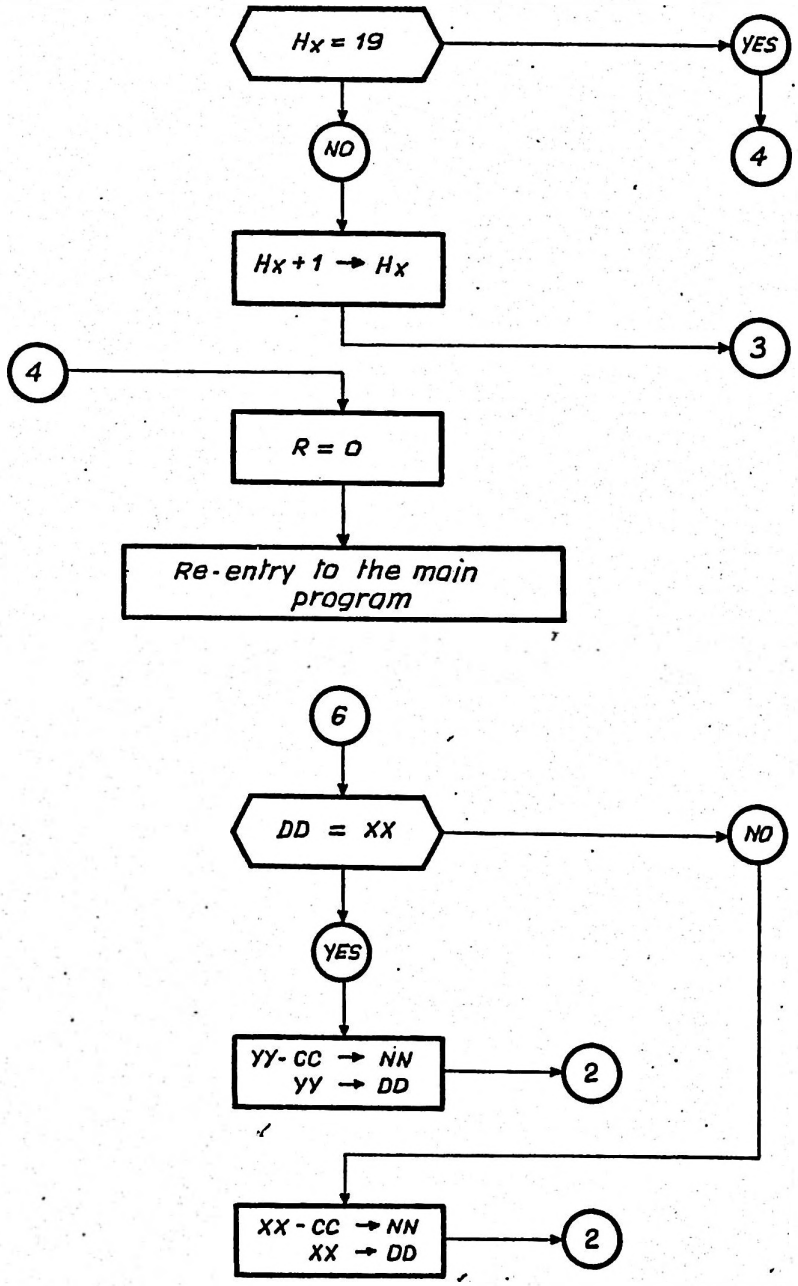
Hx = 19
YES
NO
4
Hx + 1 → Hx
3
4
R = 0
Re-entry to the main program
6
DD = XX
NO
YES
YY - CC → NN
YY → DD
2
XX - CC → NN
XX → DD
2

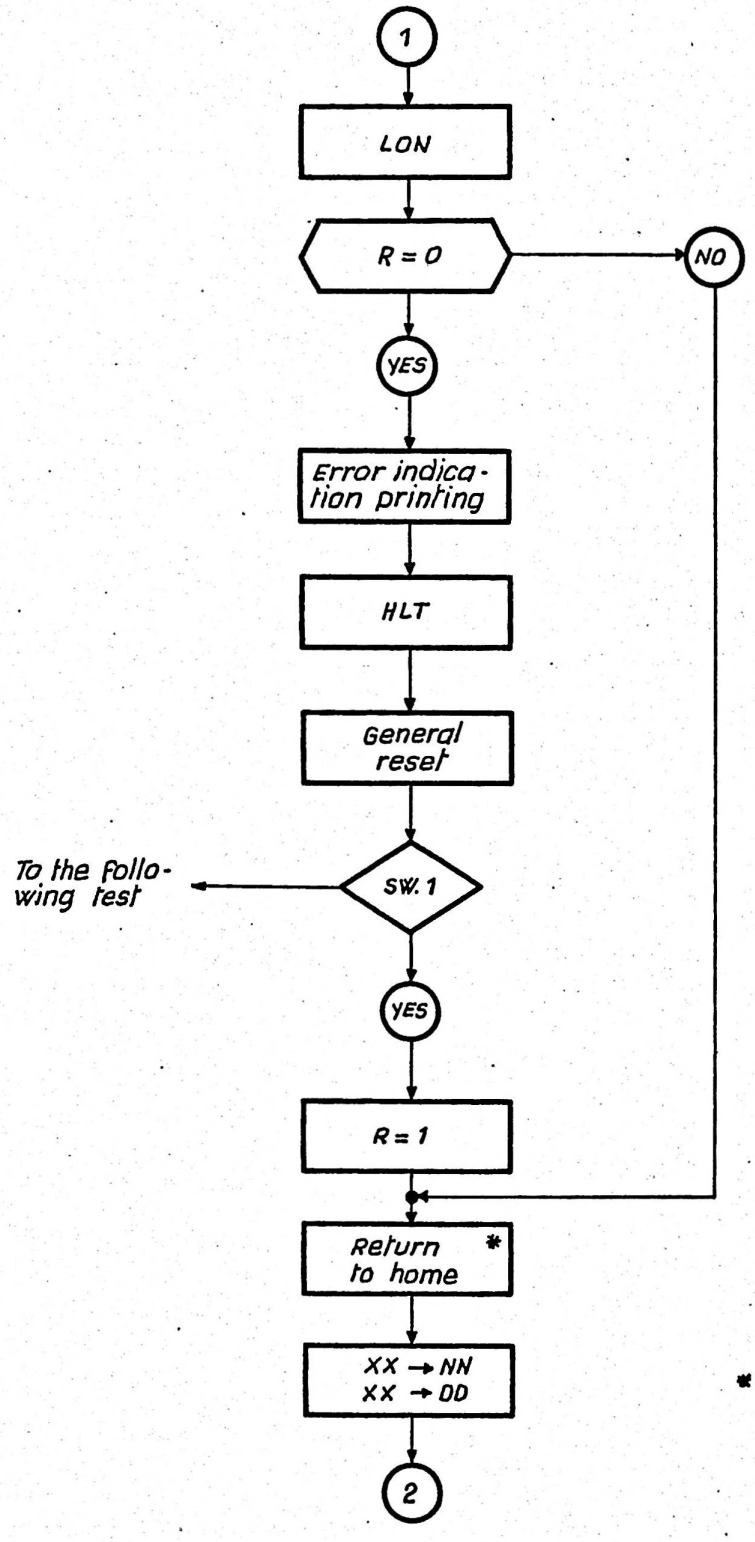

* Performed by means of the return to Home routine

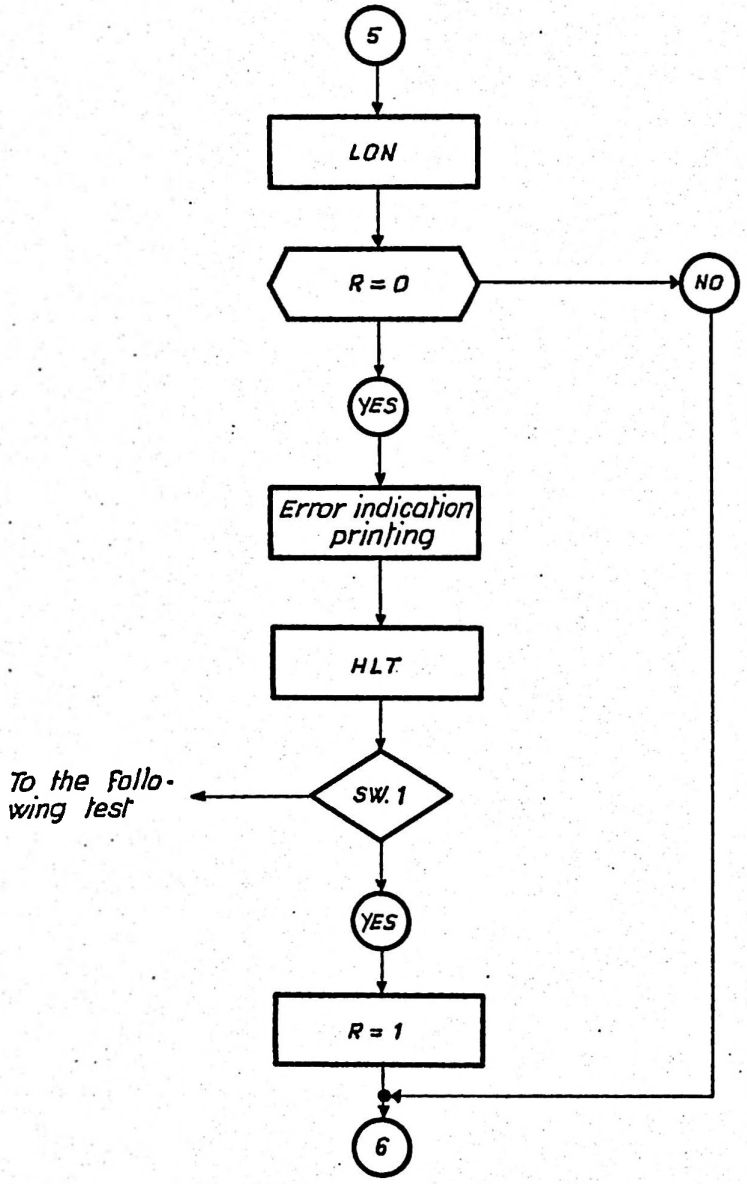
5
LON
R = 0
NO
YES
Error indication printing
HLT
To the following test
SW. 1
YES
R = 1
6

2.1.2. RETURN TO HOME ROUTINE

The Return to Home command is followed by a set of control that tests that the operation just performed is correct. In case of error, an error signal is always carried out by printer, even if SWITCH 1 is inserted.
If SWITCH1 is released, pressing START, the program goes to the following test; if SWITCH1 is inserted, the program recycles on the sequence.

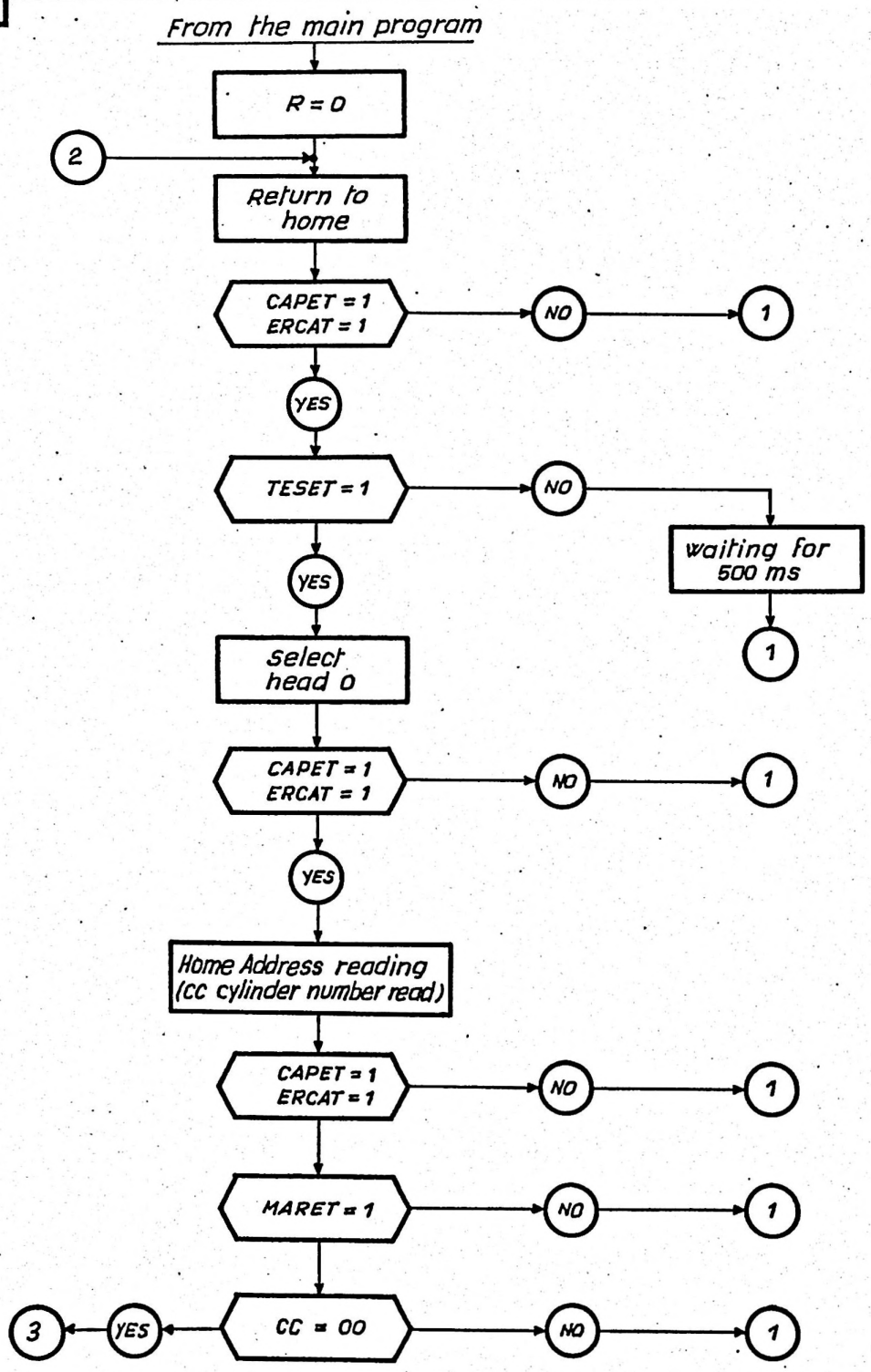
From the main program
R = 0
2
Return to home
CAPET = 1
ERCAT = 1
NO
1
YES
TESET = 1
NO
waiting for 500 ms
1
YES
Select head 0
CAPET = 1
ERCAT = 1
NO
1
YES
Home Address reading (cc cylinder number read)
CAPET = 1
ERCAT = 1
NO
1
MARET = 1
NO
1
CC = 00
NO
1
YES
3

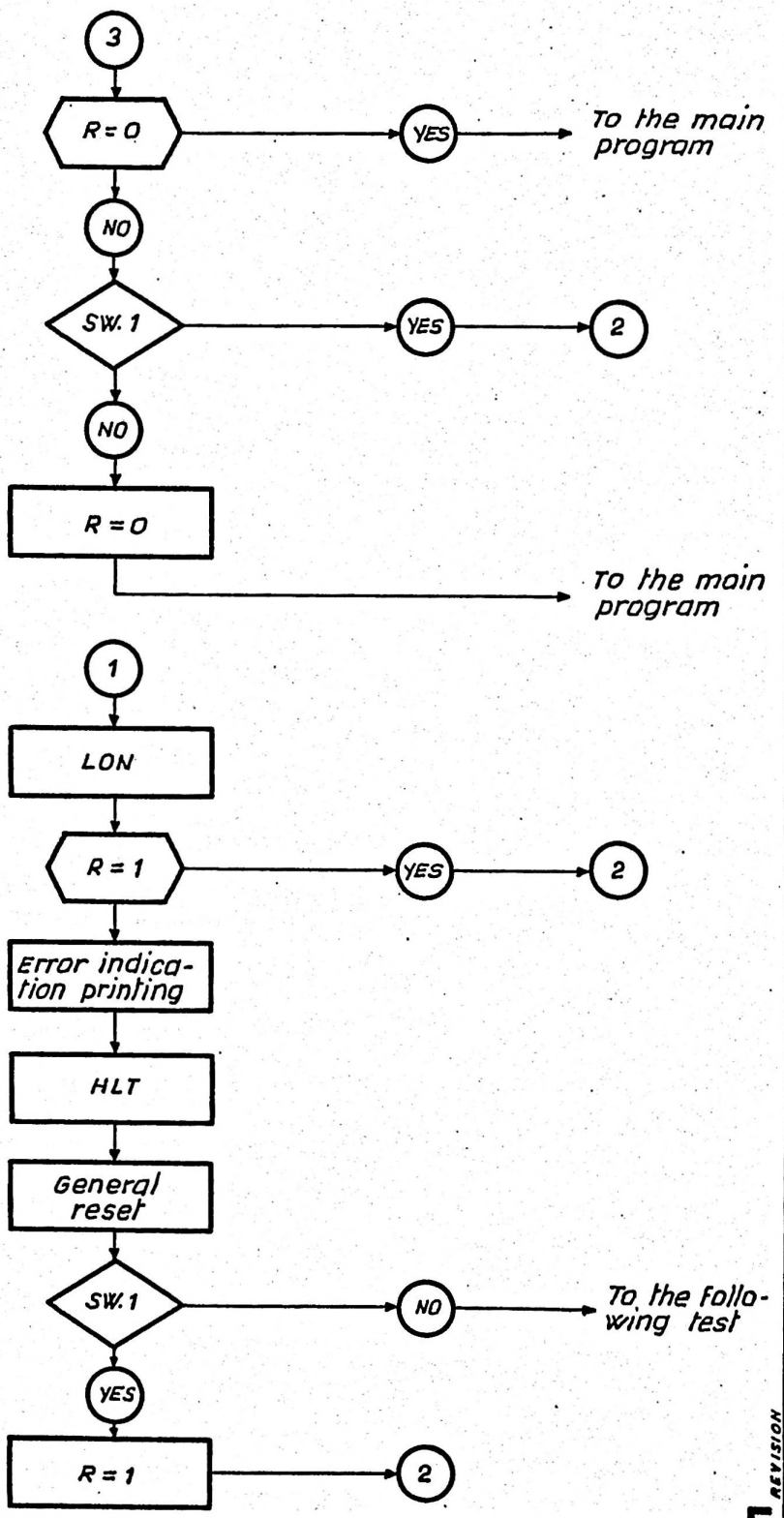
3
R = 0
YES
To the main program
NO
SW. 1
YES
2
NO
R = 0
To the main program
1
LON
R = 1
YES
2
Error indication printing
HLT
General reset
SW. 1
NO
To the following test
YES
R = 1
2

2.1.3. WRITE ROUTINE

- It writes two sectors. The writing is performed both in case of good and alternative track.
- In case of wrong track there is an immediate return to the main program; if writing is performed over sectors 0 and 1, there is also a warning printing.
- It checks whether the performed operation is correct.
- If an error occurs, it prints the error signal and allows to recycle on the writing.

The information needed to perform the writing is contained in the two characters following the instruction of jump to the subroutine

1 chrt.	CC	n. cylinder
2 chrt.	HS	head (H) and sector (S)

Honeywell
Honeywell Information Systems Italia

DSS 157 MARGINING TEST

100 LINE

1° APPLIC.

CONT. SU FO. 71 FO. 69

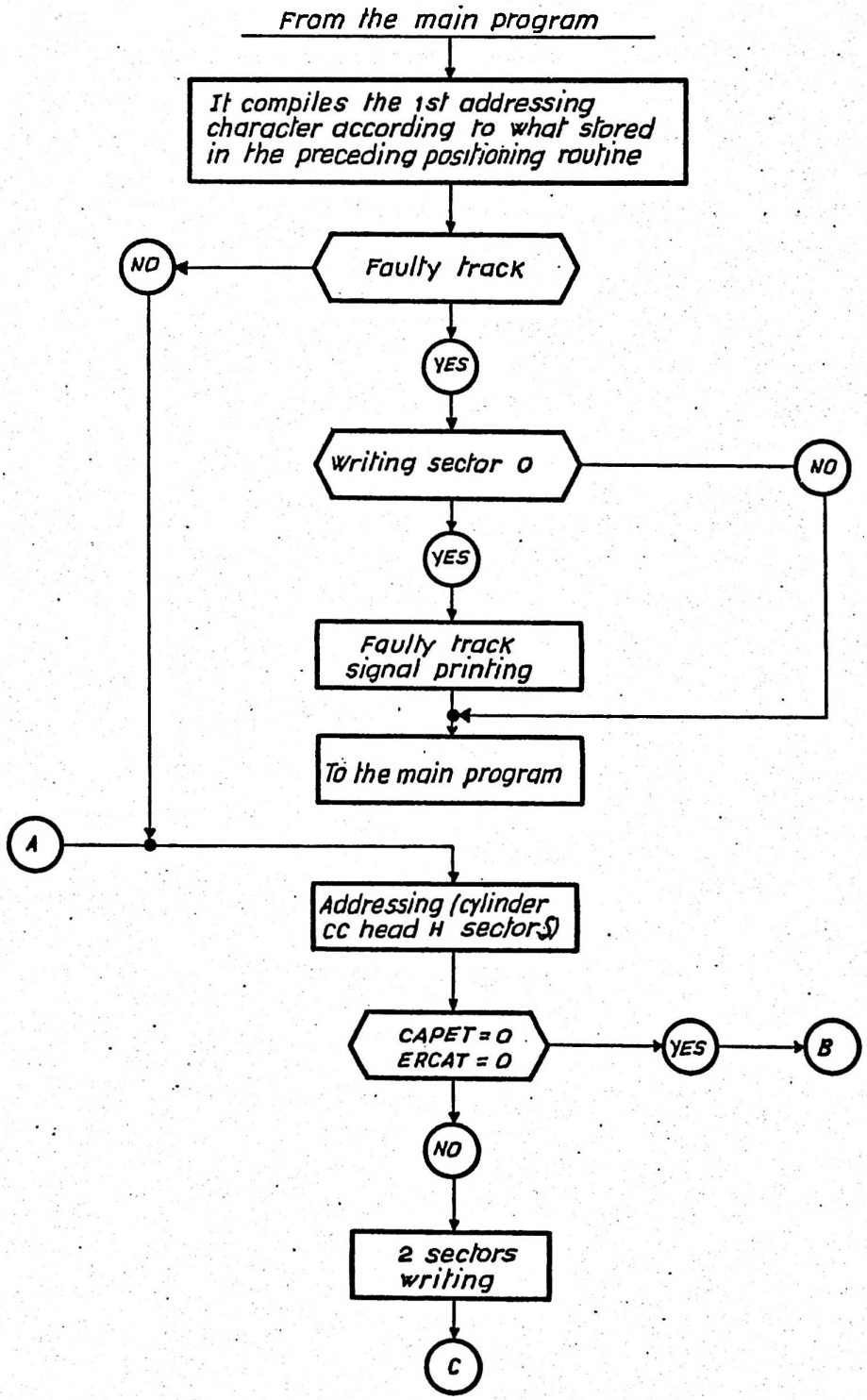

COPIE A : TO :

IND. REV.

REVISION

COMPIL. C. MONDUCCI/aa	APPR.	UNIT	
EMISS. 22 Feb. 1971		SEZ. SEG. S.P.S. HISI	N° 4T4720401EA0
		LOC. PREGNANA	CONT. SU FO. 71 FO. 69

Cod. 3896128 F

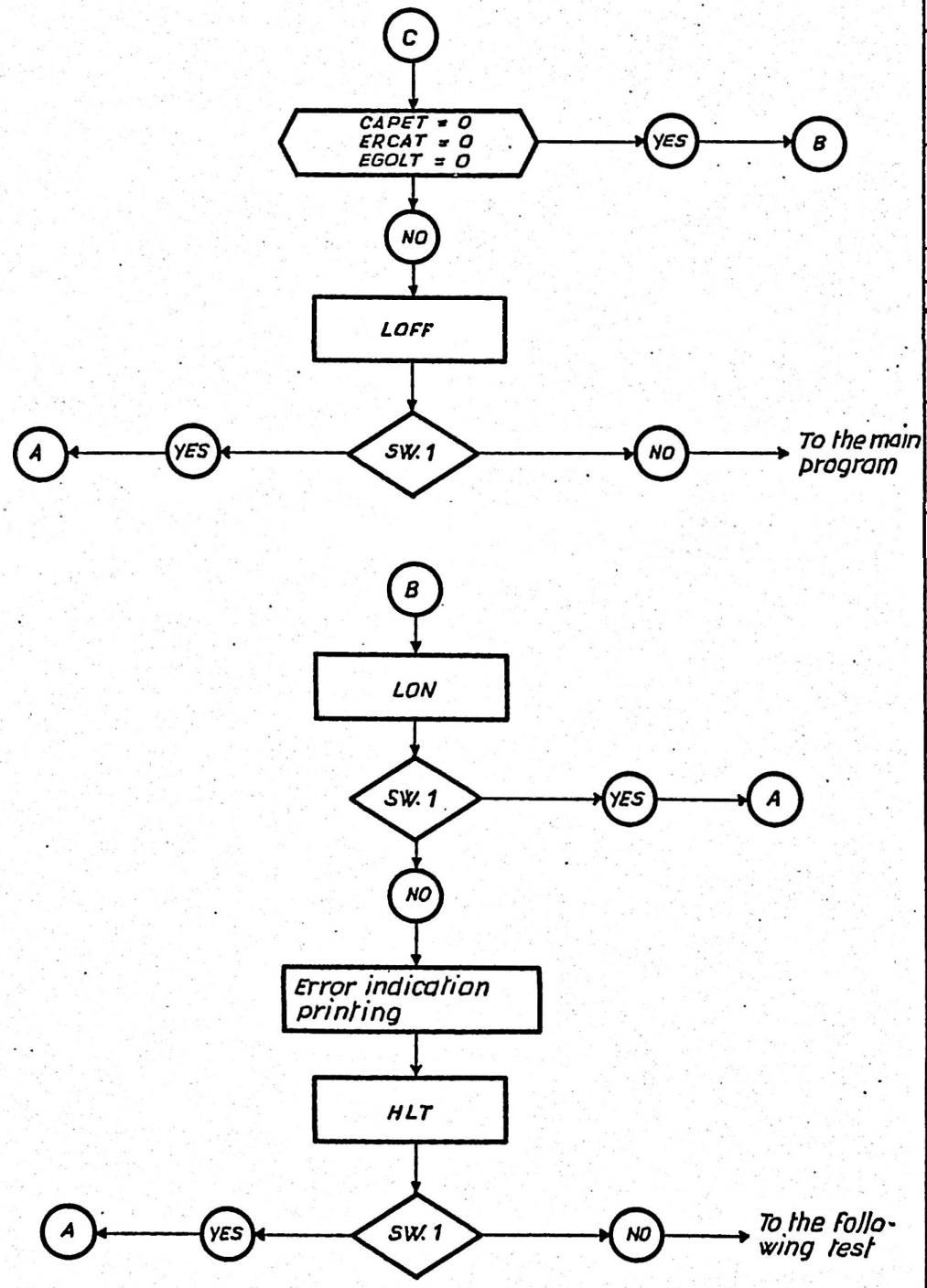
C
CAPET = 0
ERCAT = 0
EGOLT = 0
YES
B
NO
LOFF
A
YES
SW. 1
NO
To the main program
B
LON
SW. 1
YES
A
NO
Error indication printing
HLT
A
YES
SW. 1
NO
To the following test

2.1.4. READ AND COMPARE ROUTINE

- It reads two sectors. The reading is performed bot in case of good and alternative track.
- In case of wrong track there is an immediate return to the main program; if reading is performed over sectors 0 and 1, there is also a warning printing.
- By inspecting the right conditions, it checks whether the performed operation is correct.
- It compares the characters coming from disc to the ones preexisting in memory.
- If an error occurs, it prints the error signal and allows to recycle on the reading.

The information needed to perform the reading is contained in the two characters following the instruction of jump to the subroutine.

1st chrt	CC	n. cylinder
2nd chrt	HS	head (H) and sector (S)

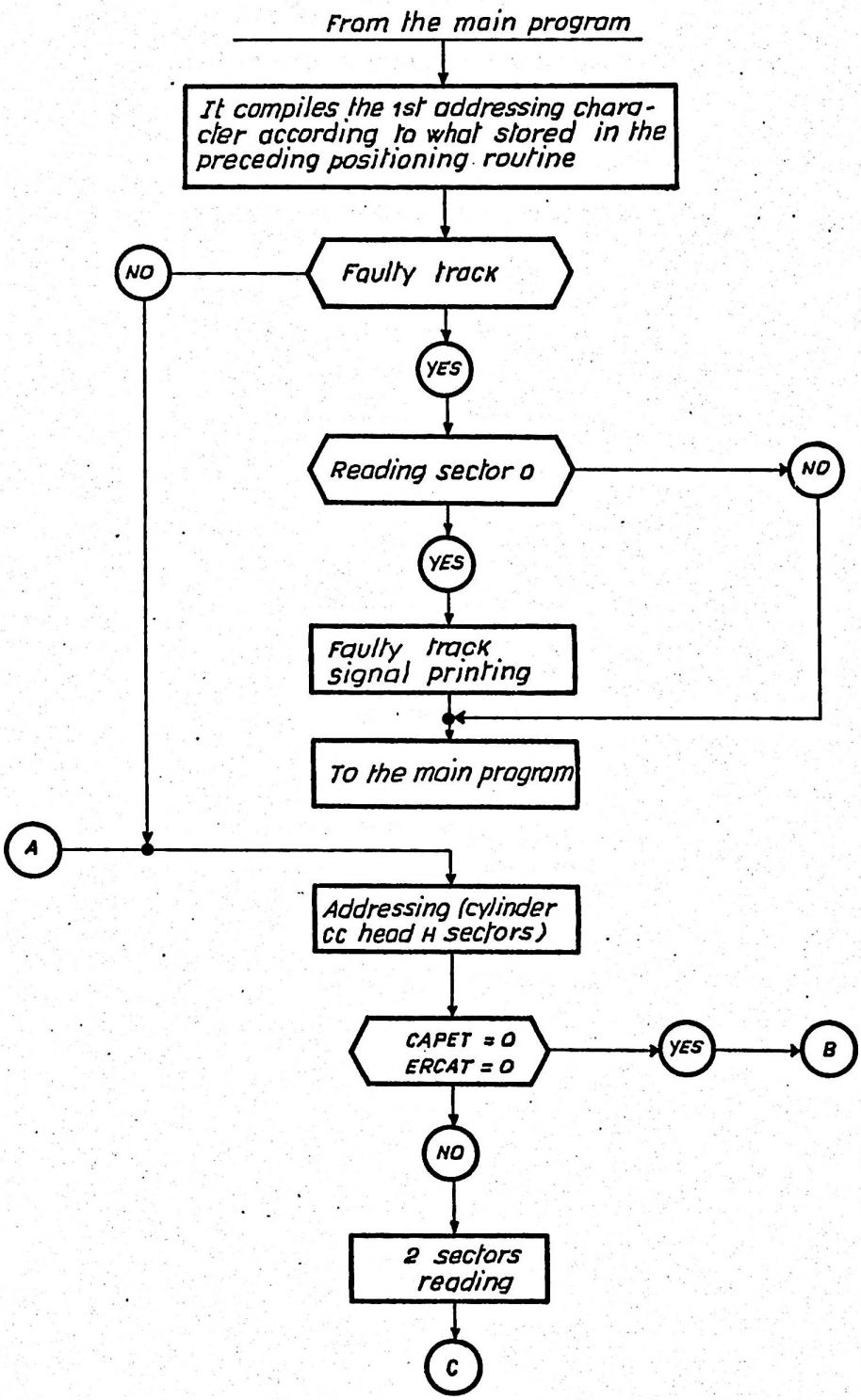
From the main program
It compiles the 1st addressing character according to what stored in the preceding positioning routine
Faulty track
NO
YES
Reading sector 0
NO
YES
Faulty track signal printing
To the main program
A
Addressing (cylinder CC head H sectors)
CAPET = 0
ERCAT = 0
YES
B
NO
2 sectors reading
C

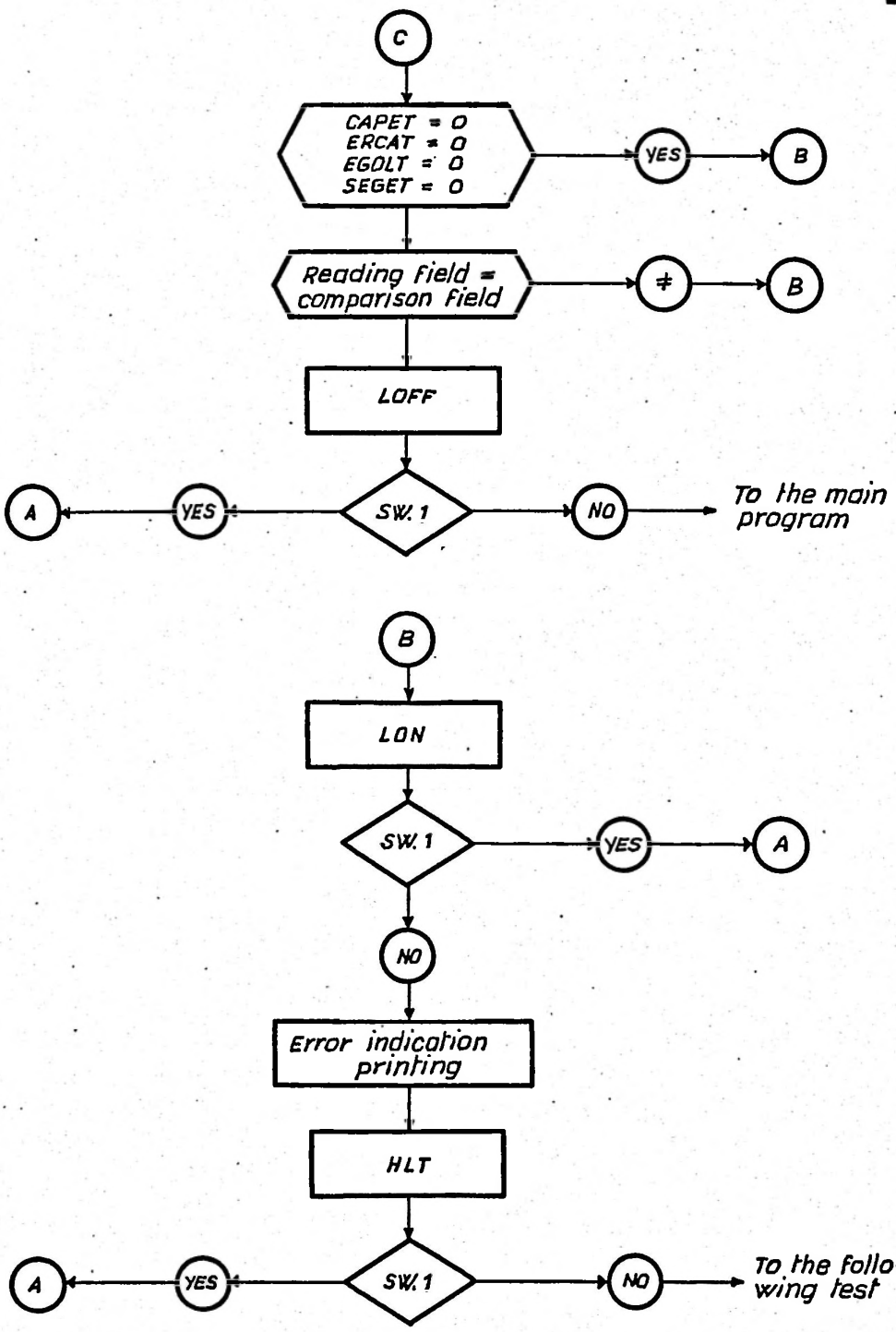
C
CAPET = 0
ERCAT = 0
EGOLT = 0
SEGET = 0
YES
B
Reading field = comparison field
≠
B
LOFF
A
YES
SW. 1
NO
To the main program
B
LON
SW. 1
YES
A
NO
Error indication printing
HLT
A
YES
SW. 1
NO
To the following test

2.1.5. REPEATED SEEKS ROUTINE

The Tests from 1 to 8 use a routine which performs 256 positionings forward reverse of parametric width, starting from a given cylinder.
The information related to the positioning width to be done and to the cylinder from which to start is contained in a 4 character field which follows immediately the instruction of jump to the subroutine and which has this format :

1st character :	00 Positioning forward reverse
	01 Positioning reverse forward
2nd character NN:	Number of steps to be done
3rd character CC:	Cylinder to be reached
4th character DD:	Starting cylinder.

SECTION 2.2.

DSS 157 MARGINING TEST FLOW CHART

Honeywell
Honeywell Information Systems Italia

DSS 157 MARGINING TEST

100 LINE

1° APPLIC.

CONT. SU FO. 85 FO. 83

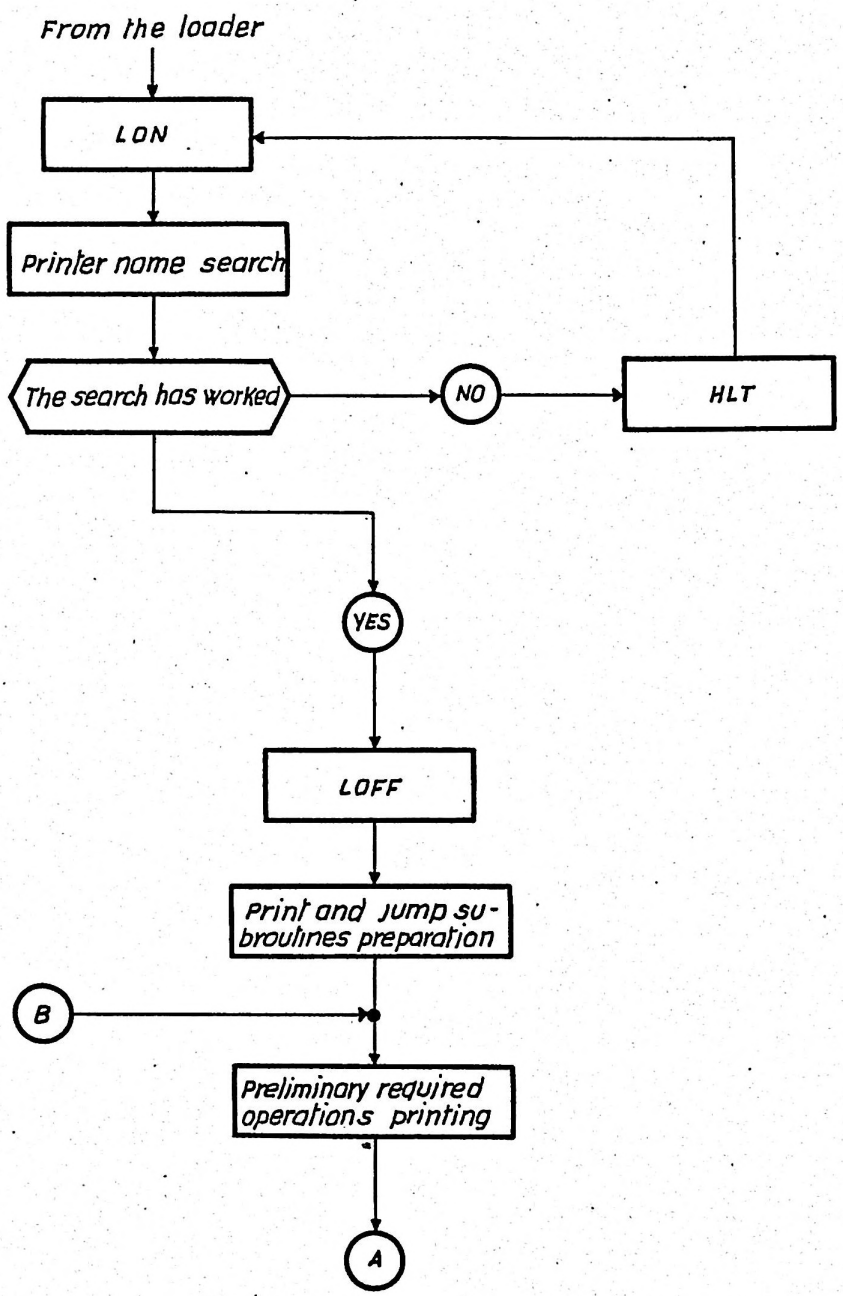

COPIE A: TO:

IND. REV.

REVISION

COMPIL. C. MONDUCCI/aa	APPR.	UNIT	
EMISS. 22 Feb. 1971		SEZ. SEG. S.P.S. HISI	N° 4T4720401EA0
		LOC. PREGNANA	CONT. SU FO. 85 FO. 83

Cod. 3896128 F

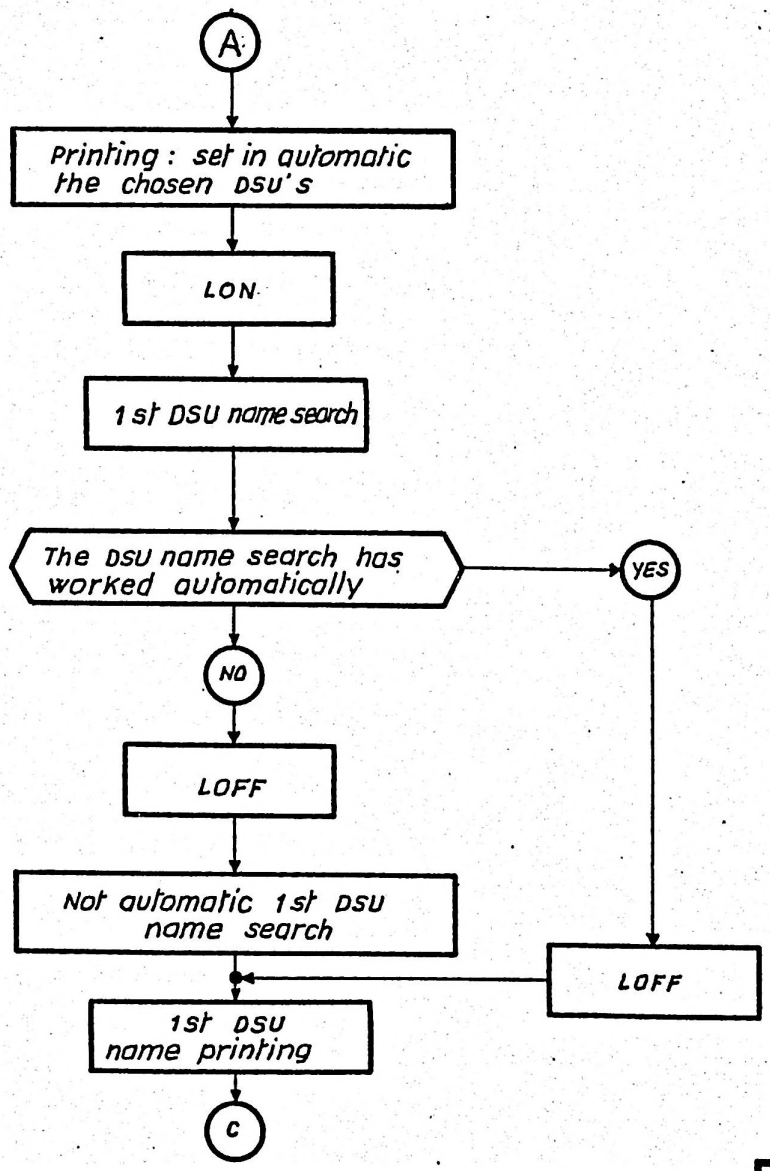
A
Printing : set in automatic the chosen DSU's
LON
1 st DSU name search
The DSU name search has worked automatically
YES
NO
LOFF
Not automatic 1st DSU name search
LOFF
1st DSU name printing
C

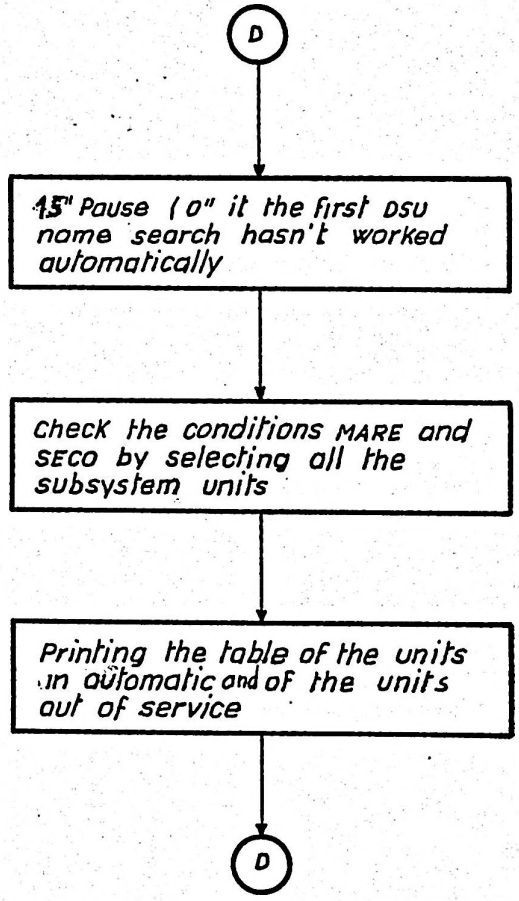
D
15" Pause (0" if the first DSU name search hasn't worked automatically
Check the conditions MARE and SECO by selecting all the subsystem units
Printing the table of the units in automatic and of the units out of service
D

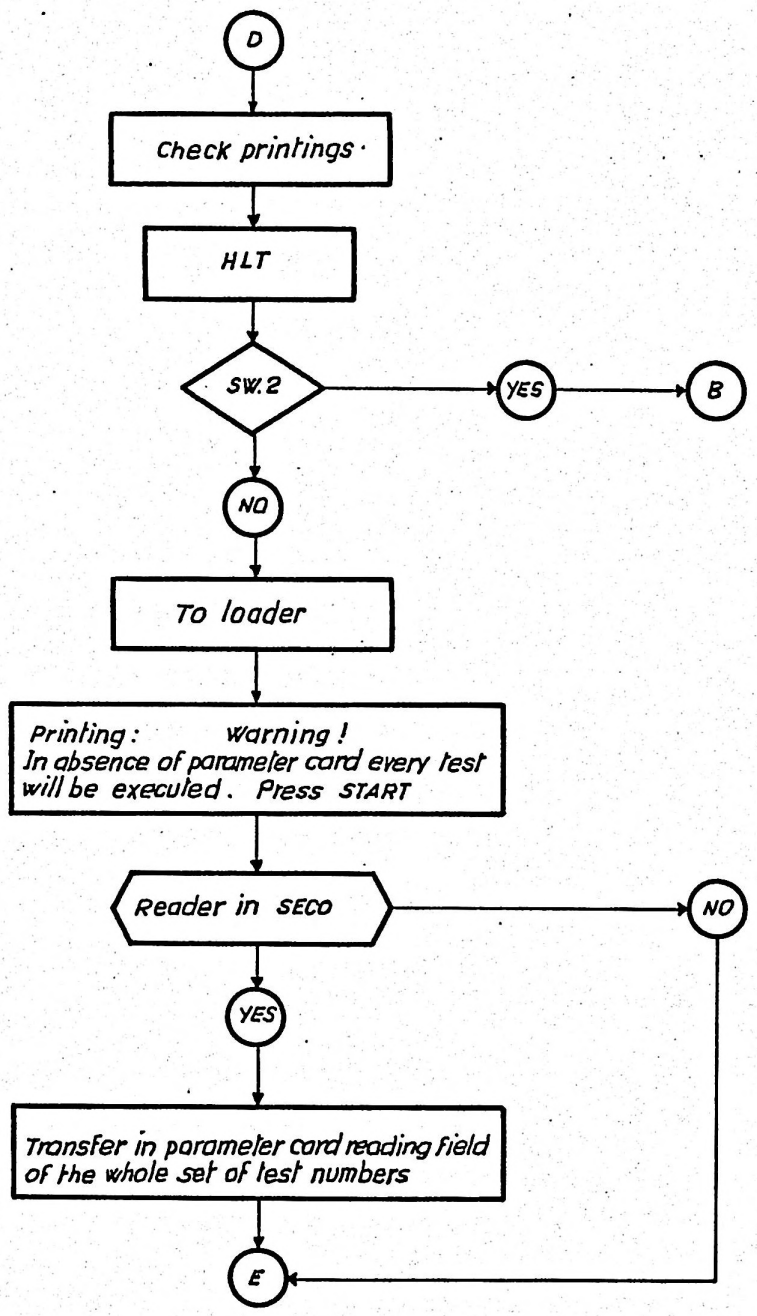
D
Check printings
HLT
SW.2
YES
B
NO
To loader
Printing: warning!
In absence of parameter card every test will be executed. Press START
Reader in SECO
NO
YES
Transfer in parameter card reading field of the whole set of test numbers
E

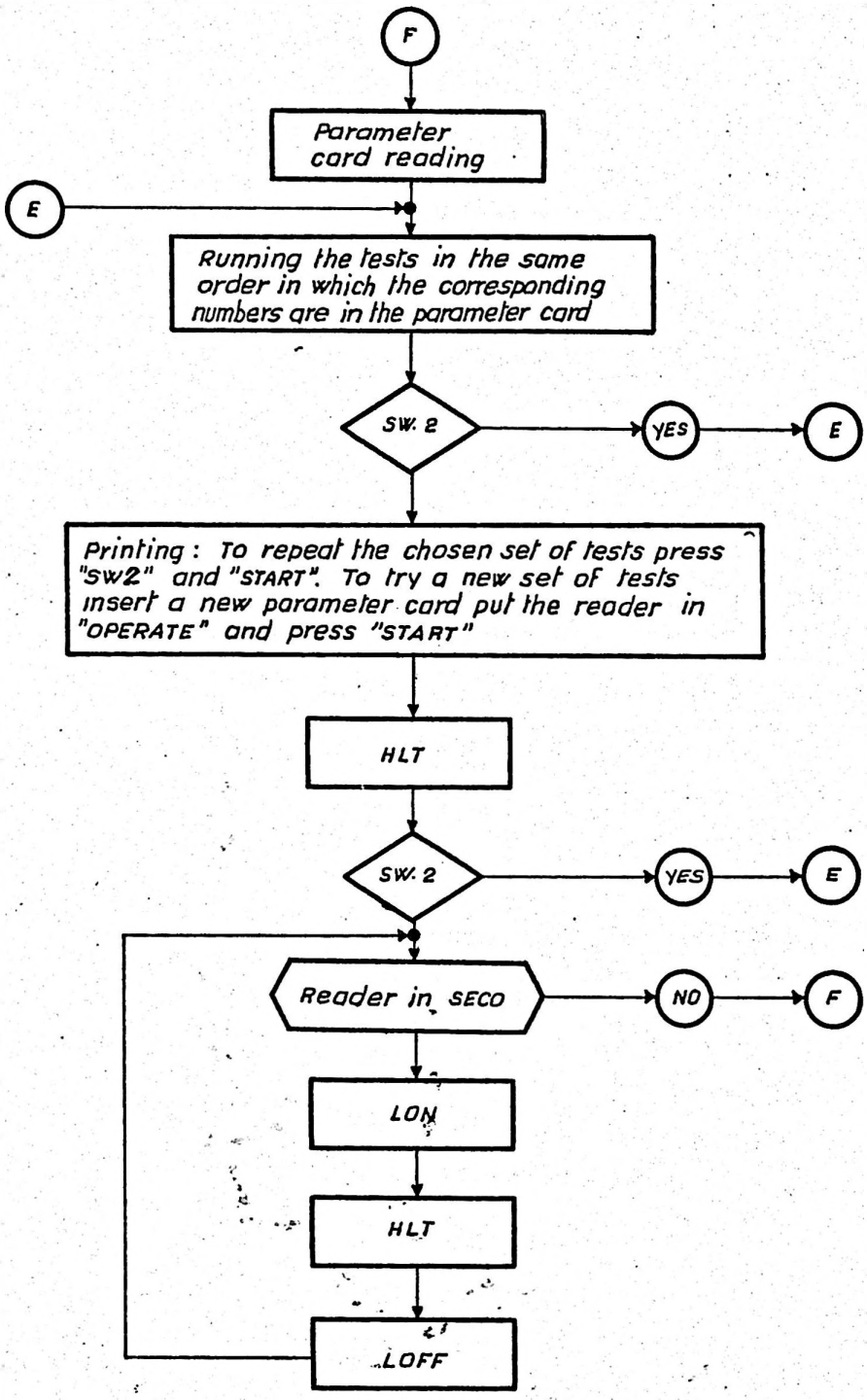
F
Parameter card reading
E
Running the tests in the same order in which the corresponding numbers are in the parameter card
SW. 2
YES
E
Printing : To repeat the chosen set of tests press "SW2" and "START". To try a new set of tests insert a new parameter card put the reader in "OPERATE" and press "START"
HLT
SW. 2
YES
E
Reader in SECO
NO
F
LON
HLT
LOFF

SECTION 2.3.

THE TESTS

TESTS 1 - 8

From the main program

Return to home

To the repeated seeks routine
from cylinder DD to cylinder CC

To the main program

TEST 1	DD = 100	CC = 101
TEST 2	DD = 100	CC = 103
TEST 3	DD = 100	CC = 108
TEST 4	DD = 100	CC = 116
TEST 5	DD = 100	CC = 164
TEST 6	DD = 010	CC = 138
TEST 7	DD = 000	CC = 202
TEST 8	DD = 010	CC = 085

TEST 9

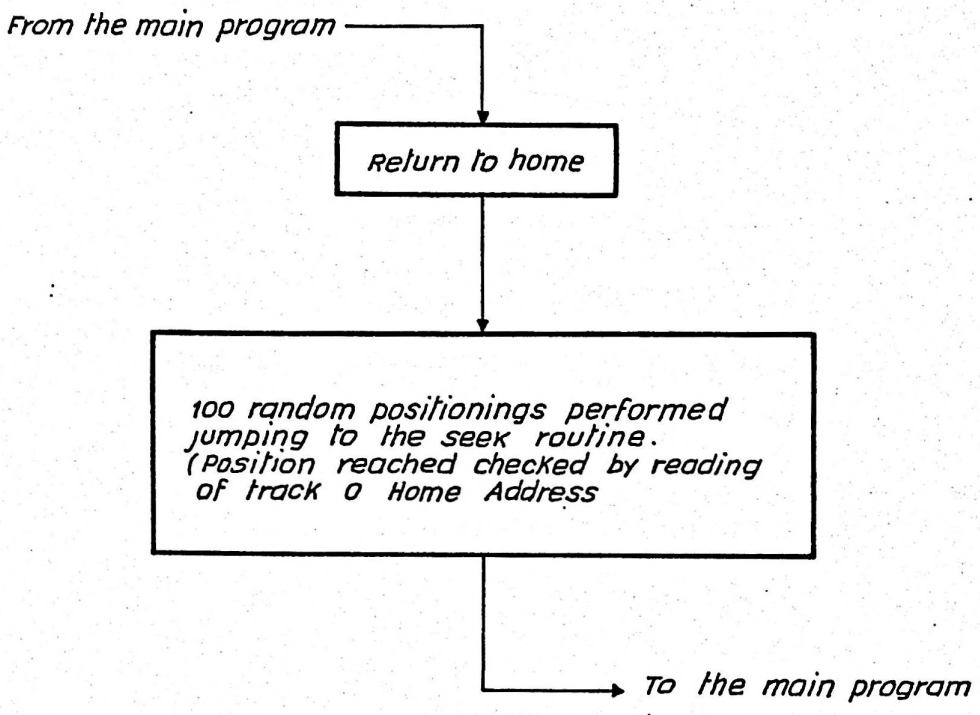
From the main program
Return to home
100 random positionings performed jumping to the seek routine. (Position reached checked by reading of track 0 Home Address
To the main program

TEST 10

From the main program

Return to home

Positionings (*) X mode according to this scheme :

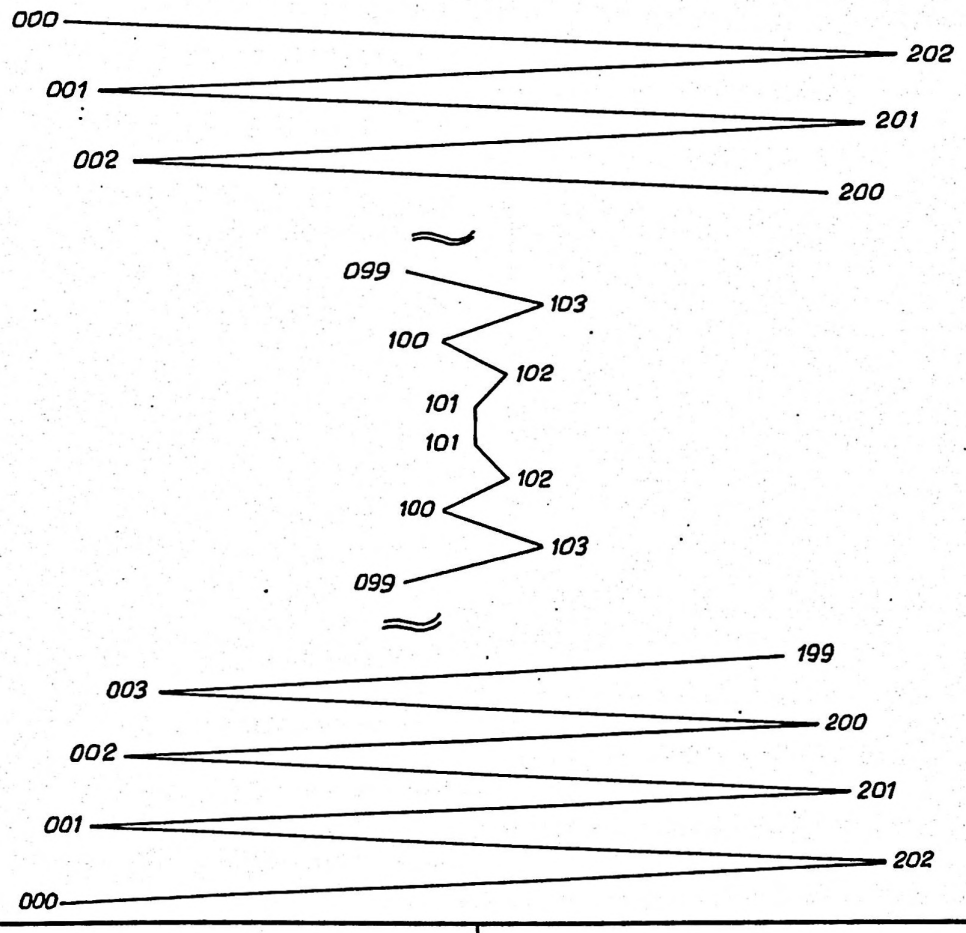

To the main program

(*) Positionings performed as seen at Test 9

TEST 11

From the main program

Return to home

Positionings (*) K mode according to this scheme :

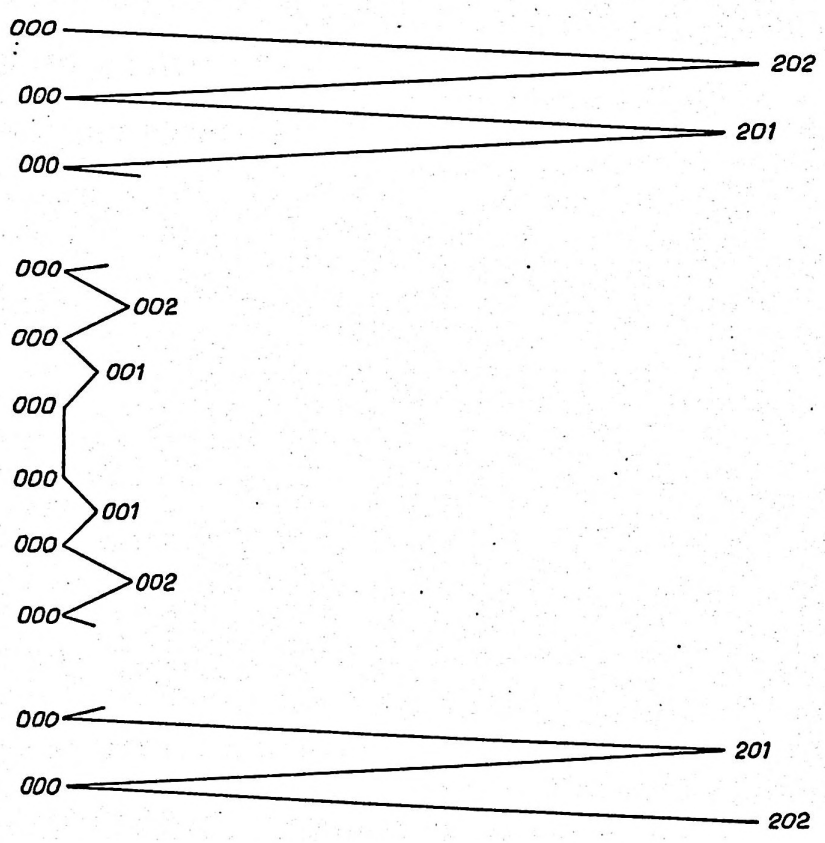

To the main program

* Positiongs performed as seen at Test 9

TEST 12

From the main program

Return to home

Positionings (*) K mode according to this scheme :

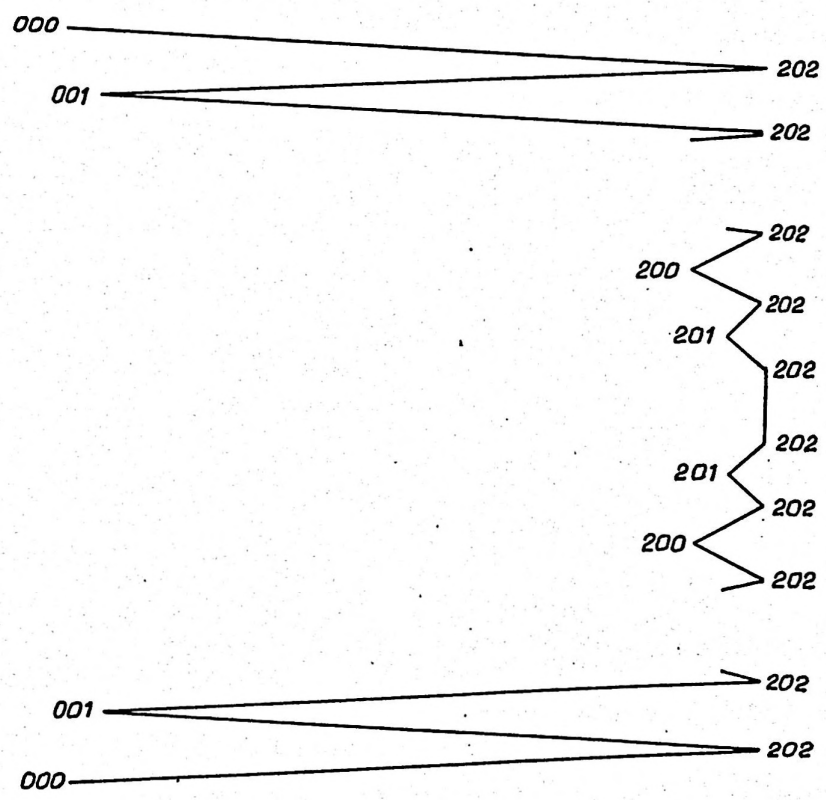

To the main program

(*) Positionings performed as seen at Test 9 .

TEST 13

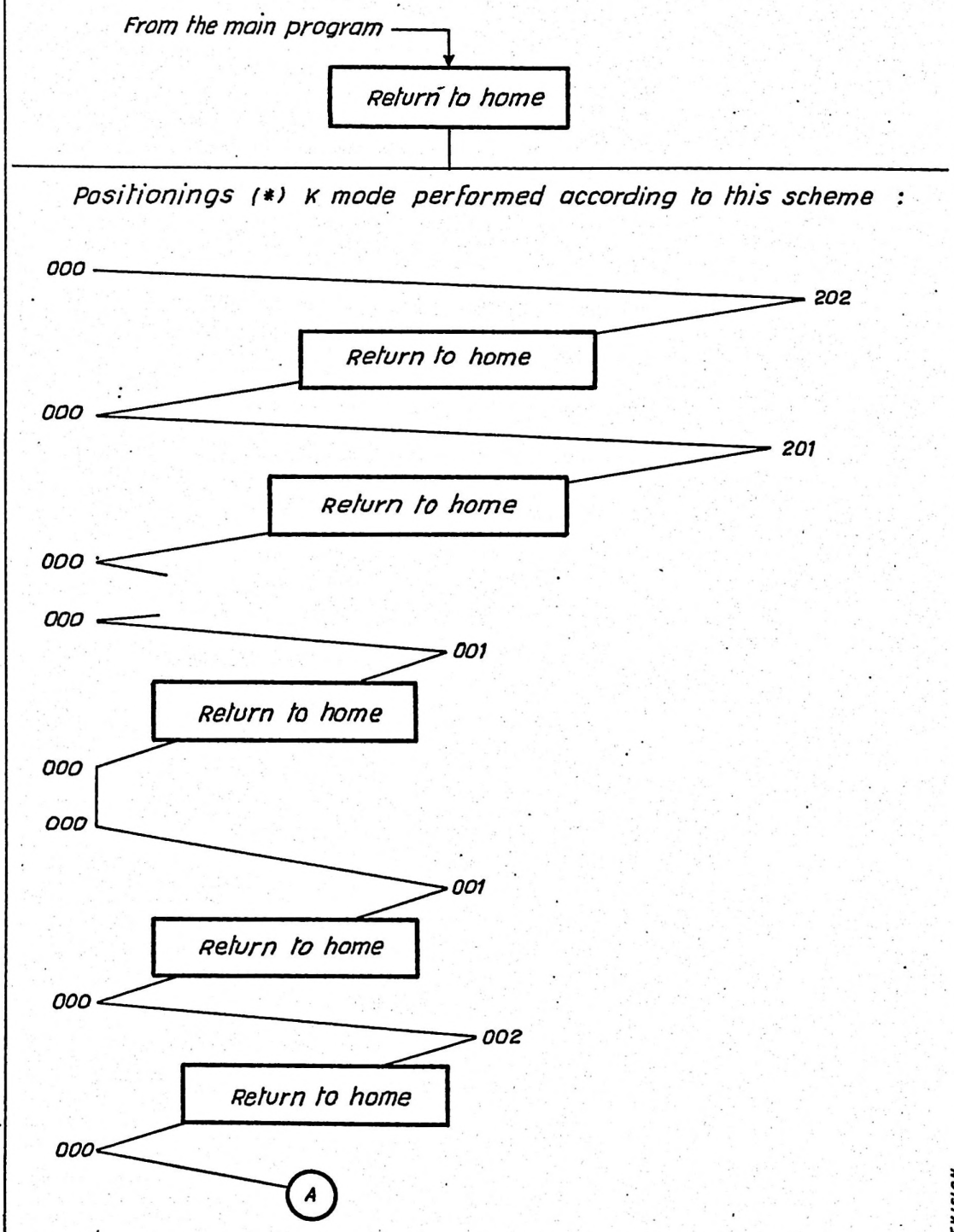
From the main program
Return to home
Positionings (*) K mode performed according to this scheme :
000
202
Return to home
000
201
Return to home
000
000
001
Return to home
000
000
001
Return to home
000
002
Return to home
000
A

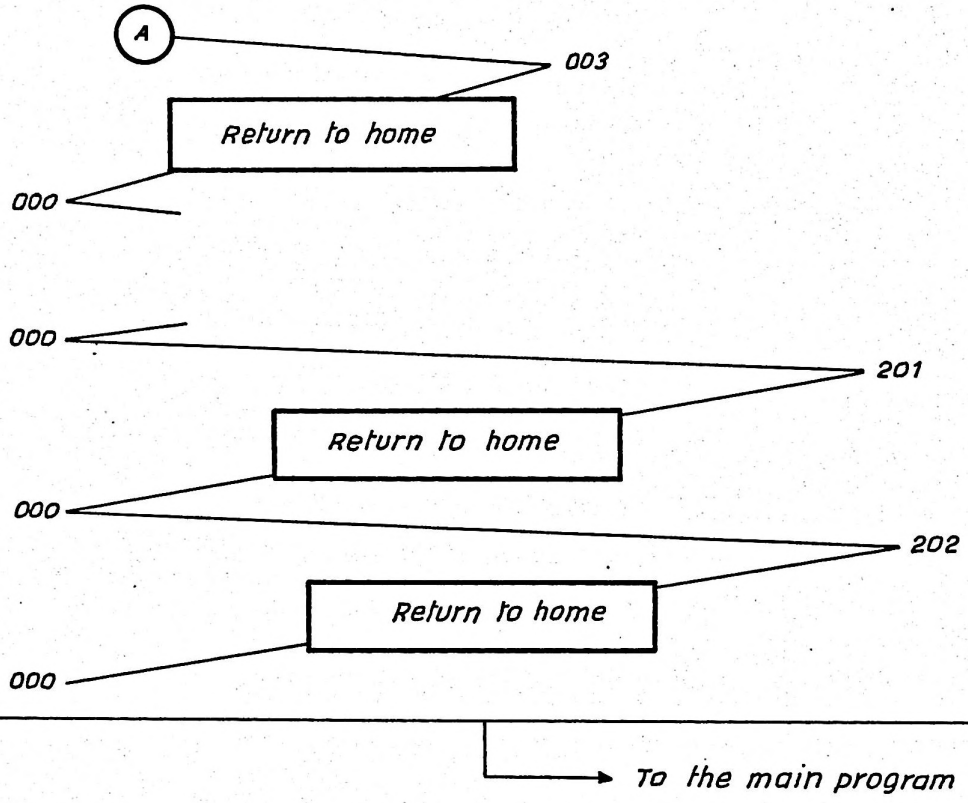

Positionings performed as seen at Test 9

Return to Home's performed jumping to the Return to Home routine

Honeywell
Honeywell Information Systems Italia

DSS 157 MARGINING TEST

100 LINE

1° APPLIC.

CONT. SU FO. 111 FO. 109

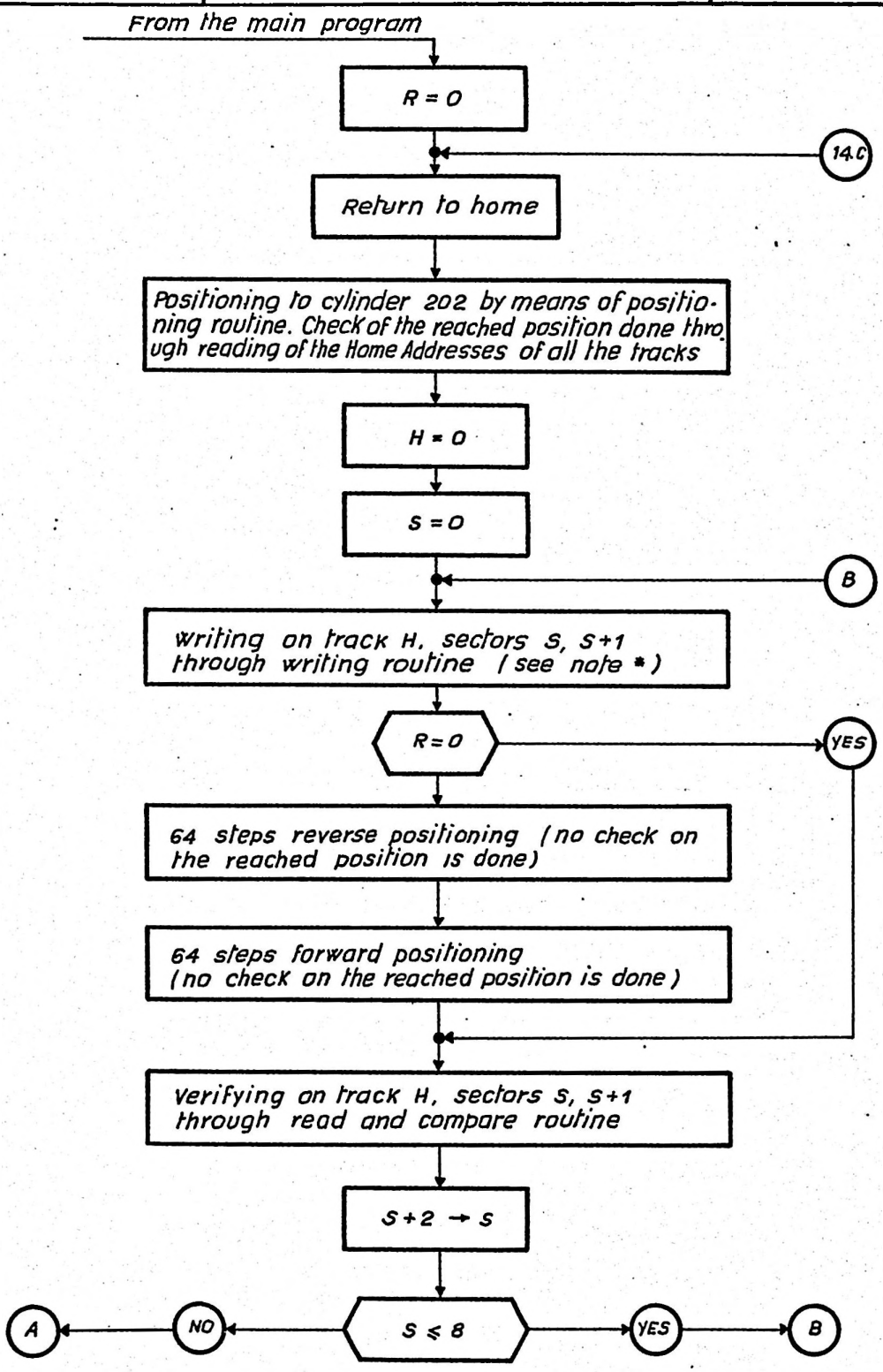

COPIE A : TO :

IND. REV.

REVISION

COMPIL. C. MONDUCCI/aa	APPR.	UNIT SEZ. SEC. S.P.S HISI	N° 4T4720401EA0
EMISS. 22 Feb. 1971		LOC. PREGNANA	CONT. SU FO. 111 FO. 109

Cod. 3896128 F

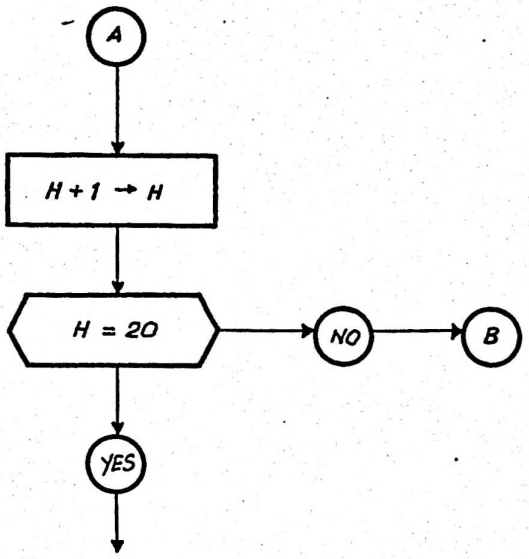

To the main program

*

SECTOR	CHARACTERS WRITTEN AND VERIFIED
0, 1	00 00 00 .....
2, 3	FF FF FF .....
4, 5	55 55 55 .....
6, 7	AA AA AA .....
8, 9	worst pattern (see appendix 1)

TEST 15

From the main program

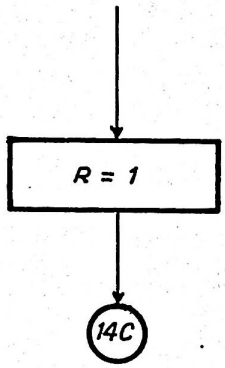

TEST 16

From the main program

Return to home

Positionings according to this scheme :

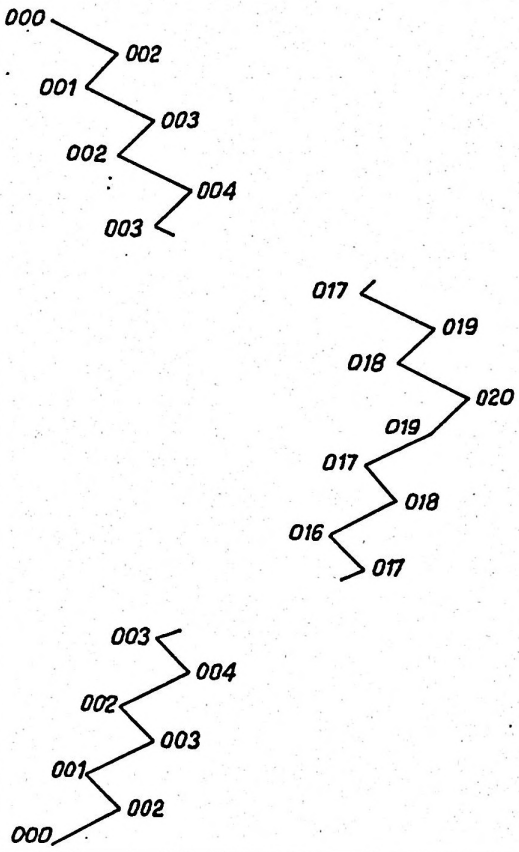

To the main program

Positionings performed through positioning routine .

Check of the reached position done through reading of the Home Addresses of all the tracks

Honeywell
Honeywell Information Systems Italia

DSS 157 MARGINING TEST

100 LINE

1ª APPLIC.

CONT. SU FO. 119 FO. 117

From the main program

Return to home

Posytioning to cy 202*

Positioning to cy 198*

Writing all 55 on the whole cylinder **

Positioning to cy. 000*

Positioning to cy. 197*

Writing all AA on the whole cylinder **

Positioning to cy 202*

Positioning to cy 199*

Writing all AA on the whole cylinder **

Positioning to cy 202*

Positioning to cy 002*

COPIE A: TO:

IND. REV.

REVISION

UNIT

COMPIL. C. MONDUCCI/aa

EMISS. 22 Feb. 1971

APPR. CM.

SEZ. SEC. S.P.S HISI

LOC. PREGNANA

N° 4T4720401EA0

CONT. SU FO. 119 FO. 117

Cod. 3896128 F

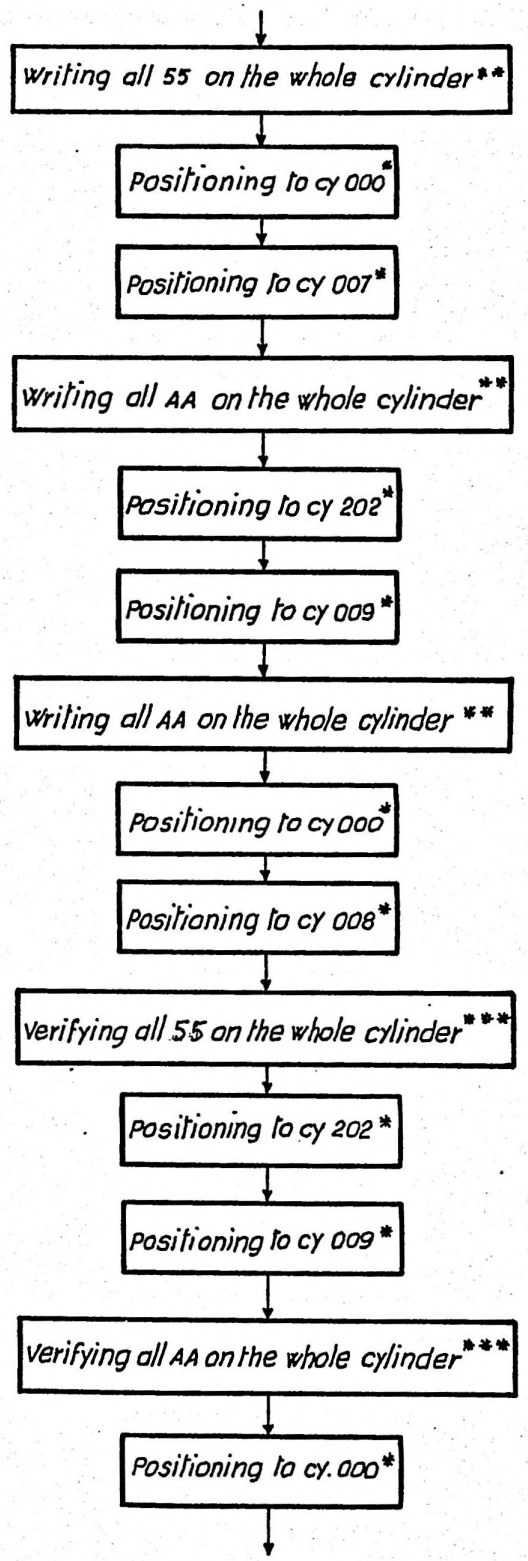
Writing all 55 on the whole cylinder**
Positioning to cy 000*
Positioning to cy 007*
Writing all AA on the whole cylinder**
Positioning to cy 202*
Positioning to cy 009*
Writing all AA on the whole cylinder **
Positioning to cy 000*
Positioning to cy 008*
Verifying all 55 on the whole cylinder***
Positioning to cy 202*
Positioning to cy 009*
Verifying all AA on the whole cylinder***
Positioning to cy. 000*

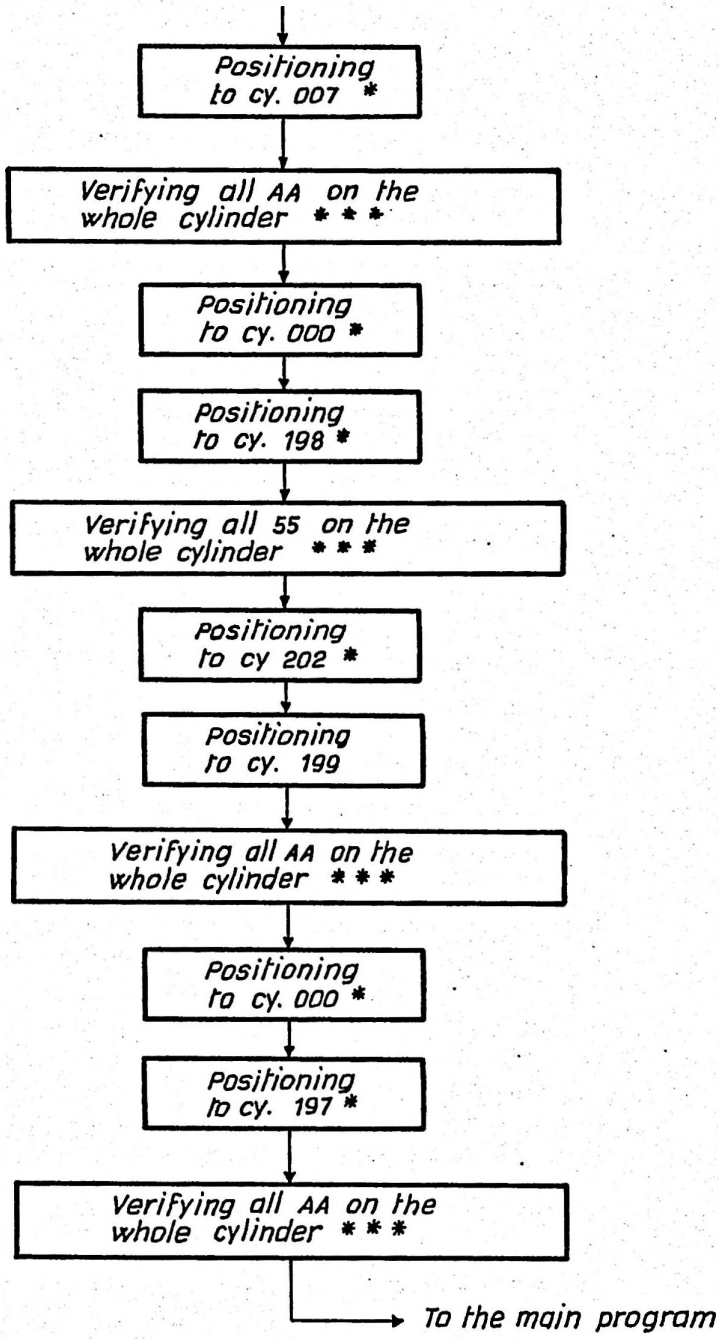

* Through positioning routine with check made through reading of Home Addresses of all the tracks

** Through the repeated use of the writing routine

*** Through the repeated use of the read and compare routine

TEST 18

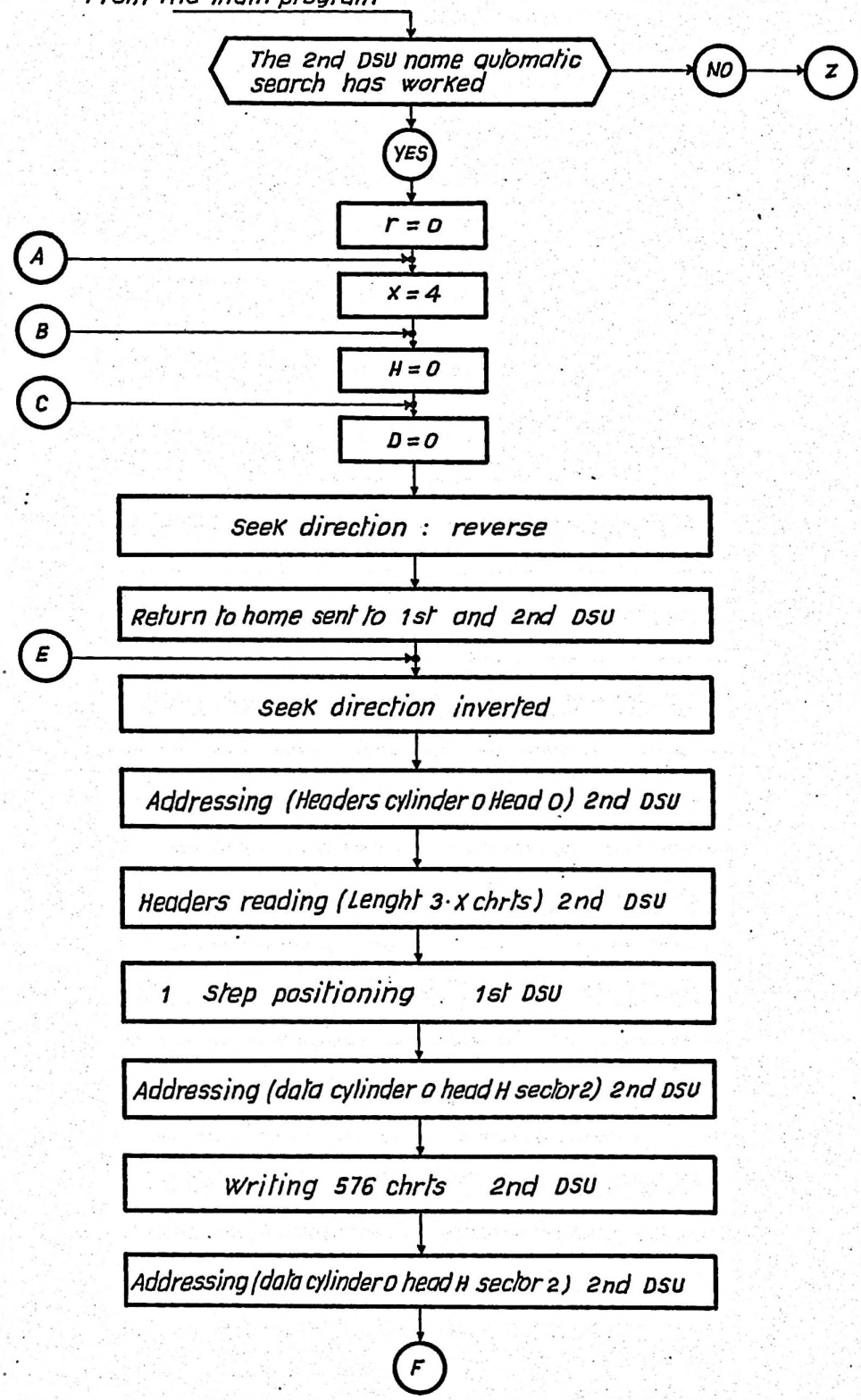
From the main program
The 2nd DSU name automatic search has worked
NO
Z
YES
r = 0
A
X = 4
B
H = 0
C
D = 0
Seek direction : reverse
Return to home sent to 1st and 2nd DSU
E
Seek direction inverted
Addressing (Headers cylinder 0 Head 0) 2nd DSU
Headers reading (Lenght 3·X chrts) 2nd DSU
1 Step positioning 1st DSU
Addressing (data cylinder 0 head H sector 2) 2nd DSU
Writing 576 chrts 2nd DSU
Addressing (data cylinder 0 head H sector 2) 2nd DSU
F

Honeywell
Honeywell Information Systems Italia

DSS 157 MARGINING TEST

100 LINE

1° APPLIC.

CONT. SU FO. 127 FO. 125

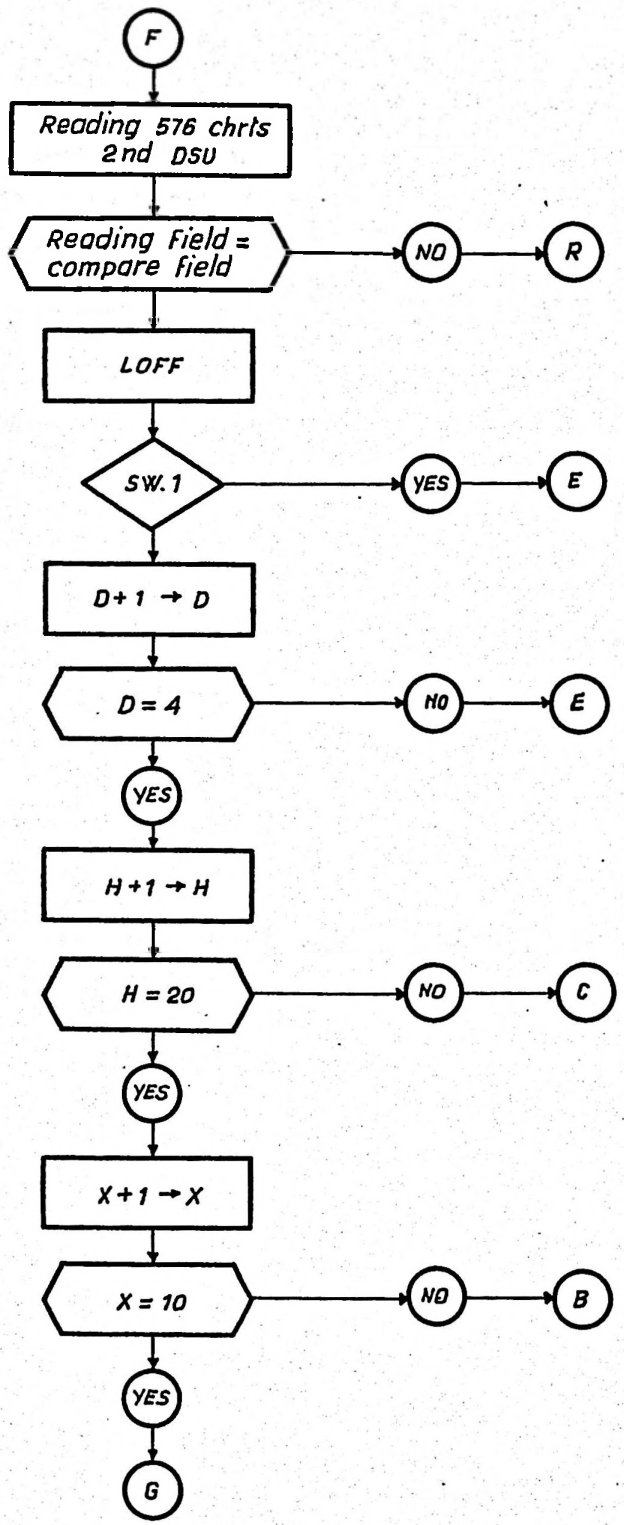

COPIE A : TO :

IND. REV.

REVISION

COMPIL. C. MONDUCCI/aa	APPR.	UNIT	
EMISS. 22 Feb. 1971		SEZ. SEC. S.P.S. HISI	N° 4T4720401EA0
		LOC. PREGNANA	CONT. SU FO. 127 FO. 125

Cod. 3896128 F

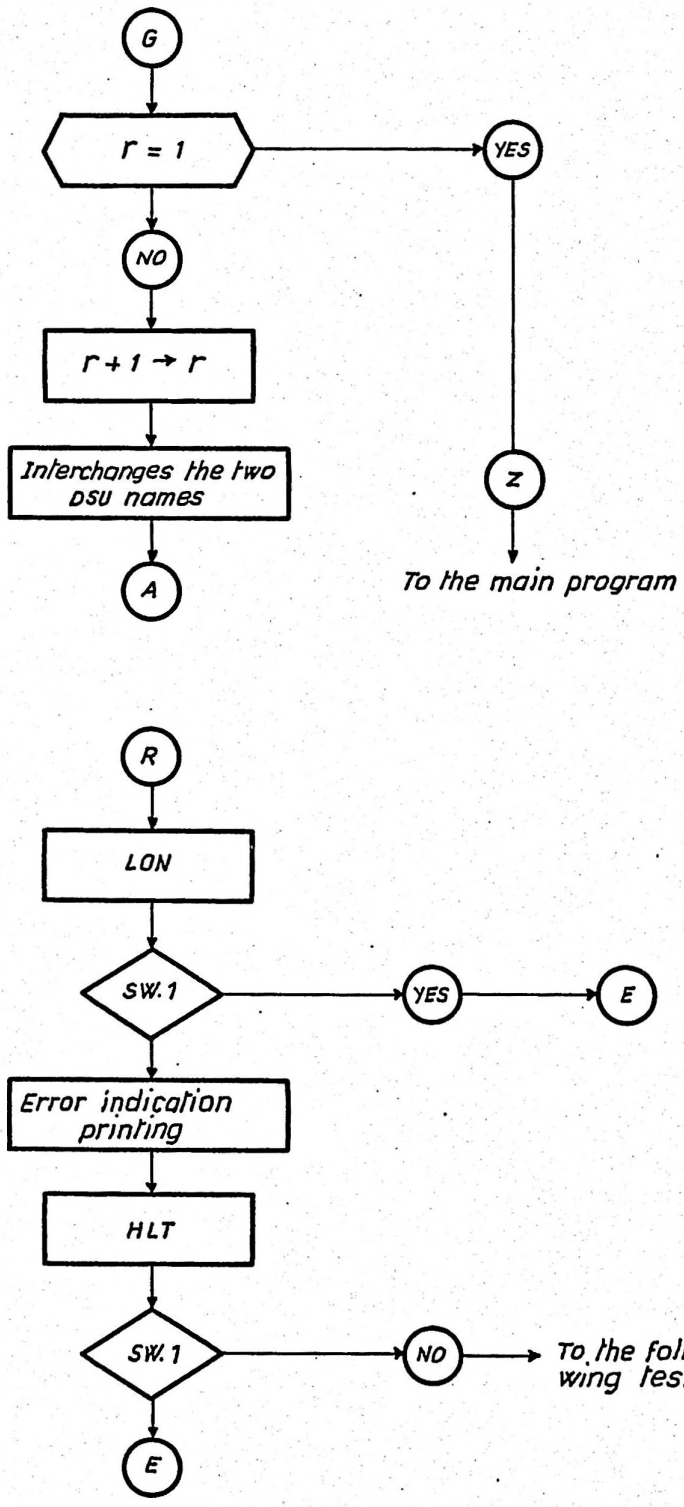
G
r = 1
YES
NO
r + 1 → r
Interchanges the two DSU names
A
Z
To the main program
R
LON
SW. 1
YES
E
Error indication printing
HLT
SW. 1
NO
To the following test
E

TEST 19

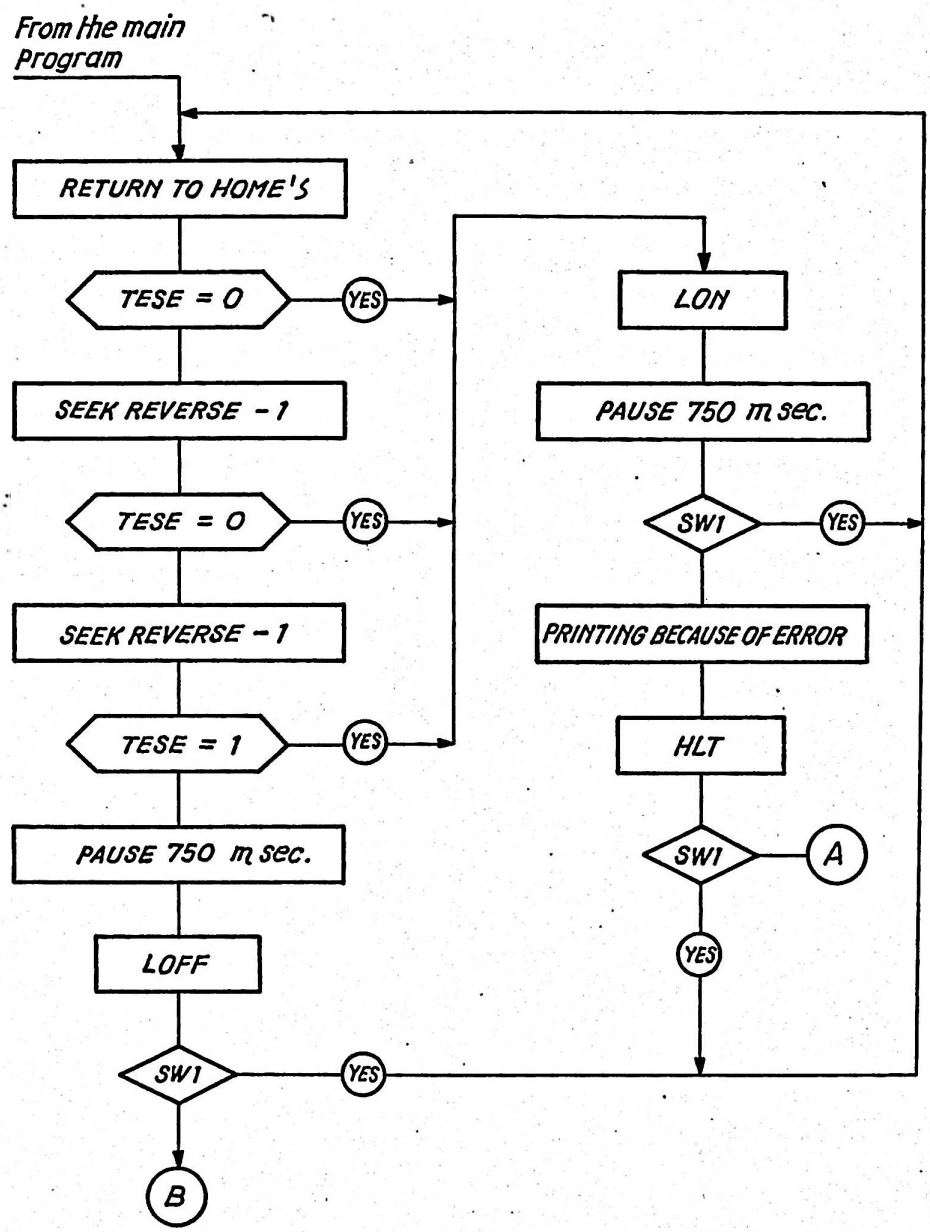
From the main Program
RETURN TO HOME'S
TESE = 0
YES
SEEK REVERSE - 1
TESE = 0
YES
SEEK REVERSE - 1
TESE = 1
YES
PAUSE 750 m sec.
LOFF
SW1
YES
B
LON
PAUSE 750 m sec.
SW1
YES
PRINTING BECAUSE OF ERROR
HLT
SW1
A
YES

Honeywell
Honeywell Information Systems Italia

DSS 157 MARGINING TEST
100 LINE

1° APPLIC.

CONT. SU PO. 133 PO. 131

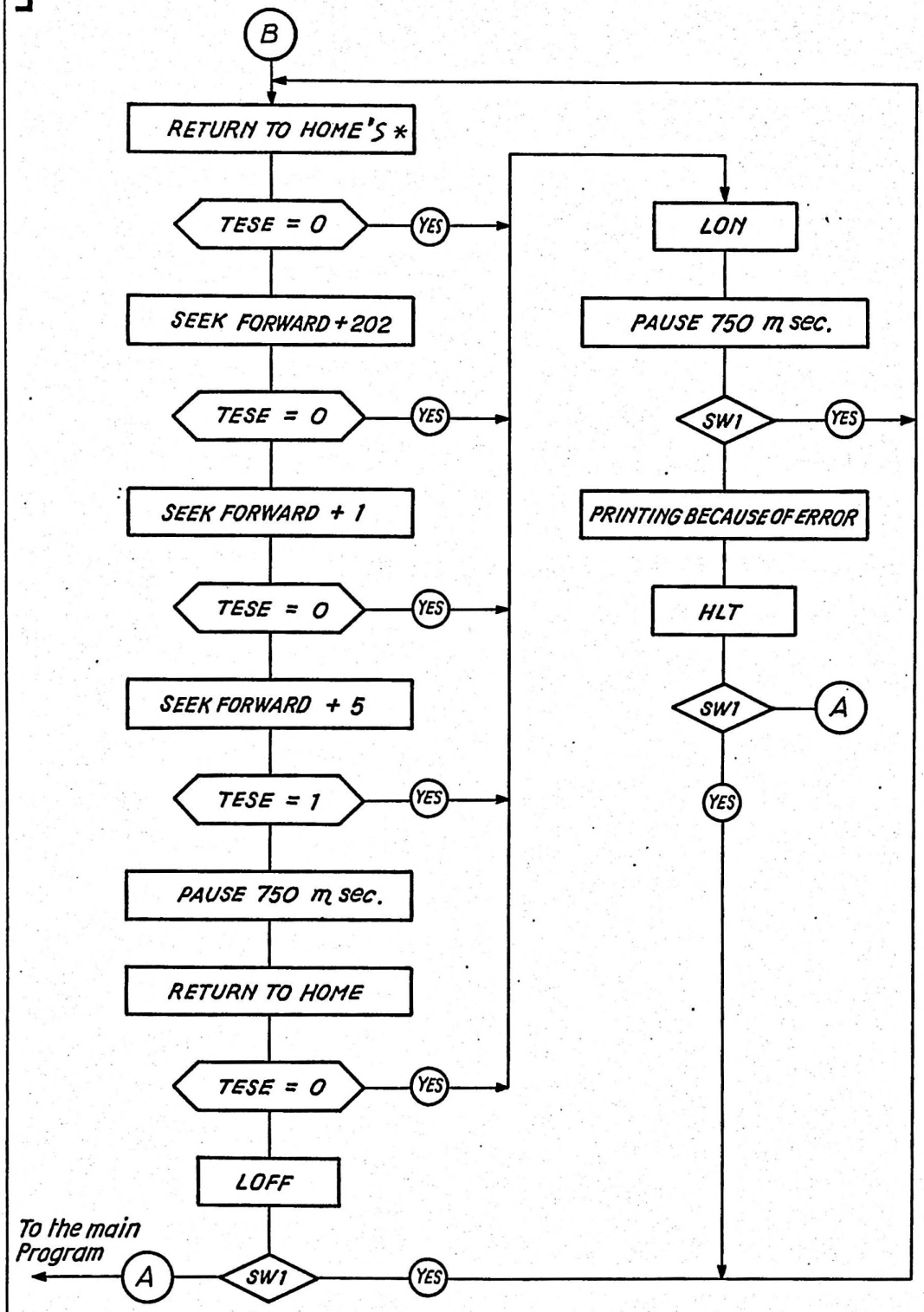

*) two Return to Home's with a 500 millis. pause interposed

COPIE A: TO:

IND. REV.

REVISION

COMPIL. C. MONDUCCI/aa	APPR.	UNIT SEZ. SEC. S.P.S. HISI	N° 4T4720401EA0
EMISS. 22 Feb. 1971		LOC. Pregnana Fil.	CONT. SU PO. 133 PO. 131

Cod. 3676128 F

APPENDIX

Worst pattern :

FBEFBE041041FFFFFF6D86DBDB6DB6878558

FFFFFE29CBDF24827800100100000555555

AAAAAA878558EE7518118AE71E1AA0878570

EE7518118AE71E1AA0878558EE75181E1AA0

FBEF...

QUESTA PAGINA E' STATA LASCIATA IN BIANCO PER RAGIONI DI IMPAGINAZIONE.

THIS PAGE IS INTENTIONALLY LEFT BLANK.

Honeywell
Honeywell Information Systems Italia

DIAGNOSTIC PROGRAM - CARD LISTING

4720410S DSS 167 MARGINING TEST CONT. SU FO. 201 FO. 000

CARD NUMBER

```
0001
000     000 0   000     000    0 00  00 0  00000000     0000 00 0 0 000   0
                1          1
  22     2     2     2  2 2        2                        2   2    2
                3                3          33 3
                4                          4     4  4          4 4
                      55            5
6     6     6     6
                            7                  7
88    88    88            8           8          8         8 8   88  8
9     9     9
0002
000     000 0   000     000    0 00  00 0  00000000     0000 00 0 0  00   00
                1          1                                  1
  22     2     2     2  2 2        2                              2
                3                3          33 3                        3
4     4     4     4                          4     4  4          4
                      55            5
6     6     6     6
                            7                  7
8     8     8            8           8          8         8     88  8
9     9     9                                                  9
```

COPIE A: TO:

IND. REV.

REV.

SECTION: S.P.S. -

LOC.: PREGNANA (MI)

APPR. Ell.

COMPIL. MONDUCCI

EMISS. 9 JUL 71

N.° 4T4720409GA0

Honeywell
Honeywell Information Systems Italia

DIAGNOSTIC PROGRAM - CARD LISTING

4720410S DSS 167 MARGINING TEST

CONT. SU FO. 202 FO. 201

```
CARD
NUMBER   0         1         2         3         4         5         6         7         8
         12345678901234567890123456789012345678901234567890123456789012345678901234567890
0003     XX      XX      XX              X             X             X           X   X
           UUU     UUU U   UUU     UUU   U UU  UU U  UUUUUUUU     UUUU UU U U UUU   U
                                                 0             0
          1       1       1     1
                                  22            2
                                3                 3     3  3           3
                                  4             4           44 4
              55      5       5       5  5 5         5                   5
                                6           6
                                                                      7       7
                                                                        8
         9 9     9 9     9 9                                        9     9
0004     XX      XX      XX              X             X             X           X   X
           UUU     UUU U   UUU     UUU   U UU  UU U  UUUUUUUU     UUUU UU U U UU    UU
                                                 0             0
          1       1       1     1
                                  22            2
           3       3       3     3                 3     3  3
                                  4             4           44 4                     4
              55      5       5       5  5 5         5                   5
                                6           6                       6
                                                                        8
         9       9       9                                        9 9   9
         123456789012345678901234567890123456789012345678901234567890123456789012345678901
         0         1         2         3         4         5         6         7         8
```

COPIE A: TO:

IND. REV.

REV.

SECTION: S.P.S. -

LOC.: PREGNANA (MI)

APPR.

COMPIL. MONDUCCI

EMISS. 9 JUL 71

N.° 4T4720409GA0

Honeywell
Honeywell Information Systems Italia

DIAGNOSTIC PROGRAM - CARD LISTING

4720410S DSS 167 MARGINING TEST

CONT. SU FO. 203 FO. 202

CARD NUMBER

```
0         1         2         3         4         5         6         7         8
12345678901234567890123456789012345678901234567890123456789012345678901234567890123456789
0005

  0  00  00  0 00  0 00  0 00  0  0  0 00  0 00  0  0     00 0   00  0 0 00000
    1  1  1    11    11  1 11  1  1    11  1 11  1  1  1 1 1 11  1 1 111 11   1
 2    2  2     22    2     2  2       2    2  2     2 2 2 2 2 2 2 2   2
          3  3 333 3 33    33  3  3    33  3 33  3  3  3 33  3   33  3 3 33
4   4

         6    66         6         6                 6 6       6       6
 7       7   7 77  7     7 7       7    7          7 777       77     7
       888 8  88 8 8 8 8  8888   8 888 8 88888 88  8    8 8888 8   888 888
          99     999  9    999   99 99 9  99  99   9    9 999   99999

0006

  0  00  0     0 00    0  0 000 0 00    0    0   0   0   0  0    0    0000
    1  1 1  1 111 11  1 11  1  1  1 11  1  1  1             1   11   1  1 1
 2    2  2  2 2 2 2   2 2   2    2 2              2   2   2   2 2 22  2 2   2
          3 3 3 33  3 33  3  3  3 33    3    3   3  33  33     33  3
4   4

         6  6 6   6   6 6                 6            6  6    6    6
 7       7 7 77   7  7 7    7 7  7 7    7    7          777      7 77 7
       88     8 888   88 8   8 8 8 8 88888 88888 888 8 8  88 888 8 8  888
       99    9    9    999  999999 99 9  99 9   99  99   9  9 9 9    99
```

COPIE A: TO:

IND. REV.

REV.

SECTION: S.P.S. -

LOC.: PREGNANA (MI)

APPR.

COMPIL. MONDUCCI

EMISS. 9 JUL 71

N.° 4T4720409GA0

Honeywell
Honeywell Information Systems Italia

DIAGNOSTIC PROGRAM - CARD LISTING

4720410S DSS 167 MARGINING TEST

CONT. SU FO. 204 FO. 203

```
CARD NUMBER   0         1         2         3         4         5         6         7         8
              123456789 0123456789 0123456789 0123456789 0123456789 0123456789 0123456789 0123456789 0
0007
                0  00    0  0     0     00     0 0 00   0  00      0     00     00     00     000 000
                  1  1     11    1  1 11  1 111  1  1 1 1  1    1     11     11  1 11  1 1
              2     2  2   2 2 22  2 2   2 2       2 2   2 2  2  2 22  2 22    22    2
                     33      33  3  3  3 3   33  3 33       3     3  3  33    33   3      3
            4   4

                     6  6   66    6                      66    66    66    66  6 6
             7       7  7   77 77 77 77 7   7   7777      7    77    77    77    77
                   8 8 8 8 888   888   88 8 888 8  8  888 888 88888 8 888 88888 8888  8
                   9   9 9 9    9999  9999 9   99 99 999 9   999   999   999   999 9 9
0008
                0  00     0  0    0 0 000  00   0  0    0 0     000 0 0     000 00  0  0 000
                  1  1 1 11  1  1 111   1   1  11  1    111  1    1  11  1  1 1  1  1  1
              2     2  22 2  2  2 2 2     2   2 2      2 2     2 2   2       2 2   2 2
                     3    333 3      3   3  3 3 33    3 3      33 3 3      33  3  3  3
            4   4                                                                      4

                        66  6 6   6           6                     6
             7          77 7  7   7           7                 7       7
                   8 88 888   888 8 8 888 8 8 888   8 8   8 888 888 888 888 888 88888
                   9999 9 9  99 9 9   99  999 9  9  999   9 9   999 9 9 9   99  9 99 9
```

COPIE A: TO:

IND. REV.

REV.

SECTION: S.P.S. -

LOC.: PREGNANA (MI)

APPR.

COMPIL. MONDUCCI

EMISS. 9 JUL 71

N.° 4T4720409GA0

4720410S DSS 167 MARGINING TEST

CONT. SU FO. 205 FO. 204

```
CARD
NUMBER
         0         1         2         3         4         5         6         7         8
         123456789 123456789 123456789 123456789 123456789 123456789 123456789 123456789 0
0009
          0 00  0 0  0    0 000 0 0 00    0 0  0    0  0  00  00  0 0 0 00 0       000
            1        1    11 1 1 111 11    111 1   111 1        1    111  1 1
        2    22 2 2          2 2 2     2 2        2 .        22    2 2     2
             3 3 3  3    3  33 3 3 33    3 3  3  3 3  3  33   33 3 3 3   3
    4   4                                                                          5
             6  6 6         6     6         6      6        6        6  6
        7    7      7      7 7      7         7 77       7    7  7     77777  7
             8888 88    8 88888 8 8   88888 8    88 8 8 888 888 8 8 8 8     8 8
              9 9 9 99  9 9  9999 9 9 999 9 9 9  99 9   99  99  999 9 9      9
0010
          0  00    0 0   00    00  0 00    0     0  0  0     0  0   0   0          000
            1  1 1   1   11  1 11    11  1  1    11    11  1  1    111 1 1 1 1 1
        2    2  2       2    2    2       2 2  2              2 2 2       2
             33      33    33  3 33  3  3 3  3    33  3  3      3 3   3 3
    4   4

             6 66  6 6    6    6  6              6  6    6        6 6  6    6
        7   7    77  7  77 7  7 7 777    7 7   7777  77   7 77  7 777 777 7 7
             88   8  88 88 88  8 88 88  8 88888   888 88  8 888   8  88 8 8 8 8
              9 9 9  9 9     9    999   99 99 9  99 999   99 999 9    9 9 9999
         123456789 123456789 123456789 123456789 123456789 123456789 123456789 123456789 0
         0         1         2         3         4         5         6         7         8
```

COPIE A: TO:	IND. REV.							REV.

SECTION: S.P.S. -	APPR.	COMPIL. MONDUCCI	EMISS. 9 JUL 71	N.° 4T4720409GA0
LOC.: PREGNANA (MI)				

Honeywell
Honeywell Information Systems Italia

DIAGNOSTIC PROGRAM - CARD LISTING

4720410S DSS 167 MARGINING TEST


```
CARD NUMBER   0         1         2         3         4         5         6         7         8
              123456789 0123456789 0123456789 0123456789 0123456789 0123456789 0123456789 0123456789 0
0011
                0  00  0    0 0 0 00  0   0   0              0 0 0 0 0          0  0   000
                  1  1       1 1 11    111 1 1 1 1 1 1 1 1 1             1       1  1  1
              2    2  2  2 2   2 2     2 2 2 2   2 2 2 2 2 2   2 2 2 2 2   2 2 2    2  2
                     33   3      3      3 3 3 3       3 3 3       3 3 3   3 3 3 3  3
            4   4

                     6  6 6   6 6   6       6     6 6     6  6 6     6         6 66
             7      7  7 777 7 77  7 77  7 7 7 777 777777777 7 77777777777 77777 7 7 7     7
                     8 8  8 8    8 8888  8   8 88888 8 88888 888 8 888 888 8 88 8888 8
                     999999999999 99 999 9                          9 9       9   9 99
0012
                0  00  0   0                    0 0 0 0 0 0 0 0 0 0 0 0 0 0 0 0            000
                  1  1 1 111 1 1 1 1 1 1 1 1 1 1       1 1 1 1 1 1 1 1 1 1 1 1 1
              2    2  2 2 2 2             2 2 2   2 2                   2 2
                     3   3 3     3 3 3 3   3 3   3 3             3 3 3 3         3 3 3
            4   4

                     6 6     6 6   6   6     6     6       6 6 6     6 6     6 6   6 6
             7      7777  7 7 7 7 7 77777 7 7 777 7 7777777 77777 777 777 777 77777 777
                       8   8   8888888888888 888 8 888 8 88888888888 8 8 88888888888 8 8   8
                       999 9 9                                          9 9 9 9 9 9
              123456789 0123456789 0123456789 0123456789 0123456789 0123456789 0123456789 0123456789 0
```

0	1	2	3	4	5	6	7	8
		MONDUCCI	9 JUL 71			4T4720409GA0		

COPIE A: TO:

IND. REV.

REV.

SECTION: S.P.S. -

LOC.: PREGNANA (MI)

APPR. COMPIL. EMISS. N.°

Honeywell
Honeywell Information Systems Italia

DIAGNOSTIC PROGRAM - CARD LISTING

4720410S DSS 167 MARGINING TEST

CARD NUMBER

```
0013

  0  00             00   0  0     0  0   0  00  0   00   0 00   0   0   0 000
    1  1          1   1 111 11  1 11  1 111   1 1 1   1 111      1       11
 2    2  22 2 2   2 2 2 2   2     2   2 2 2   2 2   2 2             2     2
            3      3   333   3  3     3      3 333  33 333 3 3 33   3  33  333
4   4

          6  6 6   6 6 6         6 6     6   6   6     6 6           6   6 6
 7       7777 777 7 7 777   7   777   7 7   77  77  7 7777  7  77  777  77 7
            8888888888 88 8   88888 888 8 8 888 888 88 8888   8 8 8 888 8 88
         99 9 9 9 99  999 9 9  9  99 9  999      9   999999 9  99  999 99  9   9

0014

  0  00       0          0 00     0     00   0 00   00  00  0     0    0  000 0
    1  1 1    1  1 11  111  1  1 11    1 1 111   1 1   1   11    1   111     1
 2    2  2    2        2 2 2               2   2               2       2
            3    33 3   3 3 3 33  3  3     3    3 333  3   3   3  3  3    3 33
4   4

          6    6  6 6   6       6 6   6 6       6       6   6   6 6       66
 7       77    7 777   77  7   7777  7 777 7   77  7   7   77  7 7   77  7 7
            8    8 8 8 8   8   888 88888 88  8 8  88 888 888 8 888 8888888 8 8
         9     9 99999 9 9 9  9  9  99 9 9 9 9 9  99  99  99  99 9   999
```

COPIE A:
TO:
IND. REV.

REV.

SECTION: S.P.S. -
LOC.: PREGNANA (MI)

APPR.

COMPIL. MONDUCCI

EMISS. 9 JUL 71

N.° 4T4720409GA0

Honeywell
Honeywell Information Systems Italia

DIAGNOSTIC PROGRAM - CARD LISTING

47204108 DSS 167 MARGINING TEST

CONT. SU FO. 208 FO. 207

```
CARD
NUMBER      0         1         2         3         4         5         6         7         8
            12345678901234567890123456789012345678901234567890123456789012345678901234567890123456789 0

0015
            0  00  0   0      00        00  00     0      0  0   0   0   0   0   0   00
              1  1    1   11  11  1 11  1   11    11  1 111     1   1   1   1          11
          2    2  2          22                        2   2                   2
                 3  33  3 3  33 3   3  3  33     3      3 33  33  33   3   3  33
        4   4

                 6   6      66  6 6       6     6     6   66  66  6            6   6
          7     77 777 77  7 7 777   7   7     7   7 77  7 7 7 7 7   77 77  777  7
                 8 8 8 888   8 8 8 8  88  88   8 888 888 8 8 8 8 888 888 8 8 888 88
                99 9   9 9 9 9 99999 9   99 9  9  9  9 9     9   9  999 99  999   9

0016
            0  00   0   0   0     0      0  0    0   0   0   0   0  00    00    0  00
              1  1     1 1 11    11  1 111  1  1 1                 1  1     11   11    1
          2    2      2        2       2          2   2   2   2          2    2     2
                 3   3   3     3  3 3 3 33     3  33  33  33  333  33    33   33
        4   4

                   6 6       6   6    6  6 6       6              6     6   66
          7     7   77  77    77  7777  77 77777  7   7   77  77     7     7  7 7 7
                 8 8 888 8 8   88888 8 8 888 8888888 8 888888888 8   88    88  8 8 8
                     9  99 9  9  9    9    9 9    9   9   9 9 9           9
```

0	1	2	3	4	5	6	7	8
12345678901	23456789012	34567890123	45678901234	56789012345	67890123456	78901234567	89012345678	9 0

COPIE A: TO:

IND. REV.

REV.

SECTION: S.P.S. -

LOC.: PREGNANA (MI)

APPR.

COMPIL. MONDUCCI

EMISS. 9 JUL 71

N.° 4T4720409GA0

4720410S DSS 167 MARGINING TEST


```
CARD
NUMBER
         0         1         2         3         4         5         6         7         8
         12345678901234567890123456789012345678901234567890123456789012345678901234567890123456789
0017
   0  00       0  0  0 00      0 00  00  00  00   0         0         0     00
     1  1 11 111  1  1 111    11 1   1   1   1 1  11    1  11    11  11    1  1
  2    2       2       2       2     2   2   2              2       2 2
             3 3  3  3 33     3 33  33  33  333  3         33        33       3
4   4

             6       6 66       66  66   6                6 6   6   6 6   6
 7       7 777         777       7   7   7        7       77        7
         8 8888   8    8 8 8    88  88  88   8  888 8 88  8 8 8 88  888 8 8
          999 9    9     9    9                      9  9  99    9    9
0018
   0  00  0 0  0            0 0    000000000  0  00      0  0    0 0      000
     1  1  11 11 1111111111 1 1111          11 11 11 1  11  11 1  11 1      1  1
  2    2    2 2 22222222222 2 2222          22 22      2 2         2
            3    33333333333  333            3 3333     3  33     3 3      3
4   4                                                                      4

                6       666  666       66 66666   6        6
 7       7      7    7777      77    7777  777 77 7       7 7       77 7 7
         888    8  88  88  88 888  88  88  88    88 8 88  888 8 88  88 8 8 8
           9      9 9 9 9 999   9 9 9 9 9 9  9    9    9    9    9   9 9 9
```

Honeywell
Honeywell Information Systems Italia

DIAGNOSTIC PROGRAM - CARD LISTING

4720410S DSS 167 MARGINING TEST

CONT. SU FO. 210 FO. 209

```
CARD
NUMBER     0         1         2         3         4         5         6         7         8
           123456789 0123456789 0123456789 0123456789 0123456789 0123456789 0123456789 0123456789 0
0019
                                                                                                
             0  00  0  0 00  0 0 00  0 00  00  0 0 0 0 0 00000000000         000000000 00
               1  1 1  1 1   111  1  1 1   11  1 111 111 1           11111111          1  1
           2    2     2 2   2 2     2 2 2 2     2 2   2             22222222          2
                        3 33  3 3 33  3 333 33  3 3 3 3 3  3       333    3   333333333
         4   4
                                                                                                5
                        6                 6   6   6 6   6    6666666   6 666 66     66666
           7       7     7   7       7             7       7  7777   77   7 7 7777   77
                  88    88  88  88  8  88  8    8   88   888  88  8  8 88888  88  88
                   9  9   9 99      9     9 9    9   9     9 9 9 9 9  999999 9 9 9 9
0020
                                                                                                
             0  00       0  0 0 00  00  0 0   0 0  0  0 00      0 0   0                 00
               1  1  1111   111 1   11  1 11  111  1  1 1    1  111  11  11        11   1
           2    2   2222   2 2     22  2 2     2     2 2   2 2 2 2   2           2
                      3  3  3 3 33  33  3 3 3   3  3    33  3     3   3  3        33
         4   4
                                                                                                
                      6  6     66   6  6                6 66  6   6                          6
           7       7777  7      7   7    7  7       7 77  7   7
                  8   8 8  8   88   8    88   8   8  8 88  88       8    8       8 8
                  9 99 9    9      9  9 99   9   9        9   9   9      9   99
                                                                                                
           123456789 0123456789 0123456789 0123456789 0123456789 0123456789 0123456789 0123456789 0
           0         1         2         3         4         5         6         7         8
```

COPIE A: TO:

IND. REV.

REV.

SECTION: S.P.S. -

LOC.: PREGNANA (MI)

APPR.

COMPIL. MONDUCCI

EMISS. 9 JUL 71

N.° 4T4720409GA0

Honeywell
Honeywell Information Systems Italia

DIAGNOSTIC PROGRAM - CARD LISTING

4720410$ DSS 167 MARGINING TEST

CONT. SU FO. 211 FO. 210

```
CARD
NUMBER      0         1         2         3         4         5         6         7         8
            123456789 123456789 123456789 123456789 123456789 123456789 123456789 123456789 0
0021
            0  00        0 0       0 0 0 0                                          00
              1    11              1                                                 1
          2    2   2
                3                   3    3
        4   4

                6        6 6       6   6
        7         777       77 7 7        7  7                                      7
                  8 8     8  8 8 8      8    8
                9999  99   99 9 9        9

0022
            0  00        0 0   0  0 00  0 0 0 00  0  0     0  0 00  0   0 00  0 0 0  00
              1  1 1 1 111 1   1    11    111  1     1    11     1     11  1     11    1
          2    2  2 2 2 2          2    2 2            22    2             2   2
                         3 3   3  3 33    3 3  3     3     33    3      3  3      3
        4   4

                        66     6     6   6   6       6
        7         777 7    7  7  77 7  77 7  77  7      7 7 77777 77    7   7777
                  8 8 8 8  8 8 8 88 88 8  88 8 8 8   8   8 8 8 88  8   8 8 8 8 8 8      8
                  999 999   9 9 99    99   9 9  99      9   999 999   9 9  99 9 9
            123456789 123456789 123456789 123456789 123456789 123456789 123456789 123456789 0
            0         1         2         3         4         5         6         7         8
```

COPIE A: TO:

IND. REV.

REV.

SECTION: S.P.S. -

LOC.: PREGNANA (MI)

APPR.

COMPIL. MONDUCCI

EMISS. 9 JUL 71

N.° 4T4720409GA0

Honeywell
Honeywell Information Systems Italia

DIAGNOSTIC PROGRAM - CARD LISTING

4720410$ DSS 167 MARGINING TEST

CONT. SU FO. 212 FO. 211

CARD NUMBER

```
0123456789 0123456789 0123456789 0123456789 0123456789 0123456789 0123456789 0123456789 0
0 1 2 3 4 5 6 7 8

0023

  0  00  0  0    00     0  0 00  0  0  0      0  0 00      0  0  0 00    0 00
    1  1   11  1 11  1 11    11     1    1    1  1  1    111 11  1  1     1  1
 2    2  2       22    2   2 2     2    2          2   2 2     2   2   2
            3  3 333 3 33  3 33    33   3    3  3  33     3 33     3
4   4

              6  66 6 66   6 6  6   6 6666       6    66  66    6  6  6
 7       77     7 77  7    77 7 7   7    77 7   7  7 7   7       7  7 7
         888 8  8 88  8888 88 88888  8 8 8 8 8 8 888888        8 88888    8
         9  9 99     9999 99    999    9 999 9  99 99    9 9 9  99 99    999   9

0024

  0  00  00  0  0 00    0 0   0  0  000 00  00  0  0.   00    00  0 00    000 0
    1  1 11 11  1  1    111 111 1         1  1    11     1  1  1  1  1
 2    2  22     2   2     2   2     2 2         2 2   2     2            2    2
           3 33  3  33   3 3 3 3 33  333  3   3    33     3  3  3  3  3
4   4

            66    6  6  6   66  66  66  6   6   6 66  666   666   666   666
 7       77     7  7 7                 7                     7     7      7
         88   8 888888                8   88888 8 8   8 8 888 8 888 8 888 8  888
         99 9  99 99 9  9 9 9 9 9    9 99   99 9  99 9 999 9  99 9 999 9  99

123456789 0123456789 0123456789 0123456789 0123456789 0123456789 0123456789 0123456789 0
0 1 2 3 4 5 6 7 8
```

COPIE A:
TO:
IND. REV.
REV.

SECTION: S.P.S. -
LOC.: PREGNANA (MI)

APPR.
COMPIL. MONDUCCI
EMISS. 9 JUL 71
N.° 4T4720409GA0

4720410S DSS 167 MARGINING TEST

CONT. SU FO. 213 FO. 212

```
CARD
NUMBER
         0         1         2         3         4         5         6         7         8
         123456789 123456789 123456789 123456789 123456789 123456789 123456789 123456789 0
0025
          0  00    0       0  0    00       0  0    00       0  0   00    0 0  0    0000
            1  1  11     11 11    1    111 11  1  1    111 11  1  1     11 11  1  1    1
         2    2  2       2    2         2       2    2 2             2 2    2    2
                  3    3 3 33  3  33   3 3 33     33     3 33  3  33     3 33    3
         4   4

                66    6   66  666     6   66  666  6  66  66  666  6  66  66  666
         7                     7 7             7 7             7             7
                 8   8     8  88888  8     8  88888  8     8  88888  8     8  8888
                     9 9  9  99 9   99 9  9  99     99 9  9  99 9    9 9  9  99

0026
          0  00       0 0  0    00       0  0  0 0 0     0 00  0 0 00  00     0  0  00
            1  1 11   111 11  1  1     11 11     11    1    1  11   1  1    1 1  1
         2    2  2     2    2         2       2       2       2           2    2    2  22
                     3 33  3  33     3 33     3    3  33    3 333  3    33
         4   4

                66   6  66  666    6   66  666    6   66 66   66  6 6   66 66
         7             7         7 7  7         7         7     7    7    77
                      8    8  88888  8    8  88    8 8     888  88 888   8   8 8
                 9    9 9  9  99 9  999 9  9  999     9   999 9    9    9 9 999
```

COPIE A:
TO:
IND. REV.

REV.

SECTION: S.P.S. -
LOC.: PREGNANA (MI)

APPR.

COMPIL. MONDUCCI

EMISS. 9 JUL 71

N.° 4T4720409GA0

Honeywell
Honeywell Information Systems Italia

DIAGNOSTIC PROGRAM - CARD LISTING

4720410S DSS 167 MARGINING TEST

CONT. SU FO. 214 FO. 213

CARD NUMBER

```
0123456789 0123456789 0123456789 0123456789 0123456789 0123456789 0123456789 0123456789 0
```

```
0027

  0  00  0 00  0   0 0   0  00 00  0 0 00  0   0  0    00  0 00      0  0  00
    1  1   1 1  1  111  11   1   1  11 11    111  1    11  1  1     11 11
 2    2  2 2     2 2 2   2 2 2 2     2  2  2 2 2     2 2   2          2        2
          333     3 3 3 3 333 33    3 333   3 3 33    33     33   3 3 33      3
4   4

        66 6  6    6  6   6   66  6   6 6 6 66  6   6  6  6 6     66  66  6
 7        7777    77       7             7    7         7     7     7
         888 8888 888   8  88   8 88   88    8 8   8    88    888   8     8
          9 999 9 9 9   9 9    9  9 9      99 9    99    9  99    999 9  9

0028

  0  00  00 00      0  0    00      0  0    0 0 00   0  0 0   0  00    0  000
    1  1 11  1     11 11     1    111 11     11 1   1    1   11  11    1
 2    2  22       2 2                2         2   2 2       2 2  2    2     2
          3  3    3 3 33     3    3 3 33  3   3 33  33   3    3  33    33
4   4                                                                        4

        66 6  6  66  66  6 6  6  66  66  6 6   6   66 66   6      6    6 6
 7          7 7   7          7 7             7   7   7              7    7
         8 8888  8     8   8888  88    8   8   888 888 8 8  88   88    8 8
         9 99 9  999 9  99 99 9  9 9 9  99 999 9   99  9 9 9 9    9    9 9
```

```
123456789 0123456789 0123456789 0123456789 0123456789 0123456789 0123456789 0123456789 0
```

COPIE A: TO:

IND. REV.

REV.

SECTION: S.P.S. -

LOC.: PREGNANA (MI)

APPR.

COMPIL. MONDUCCI

EMISS. 9 JUL 71

N.° 4T4720409GA0

Honeywell
Honeywell Information Systems Italia

DIAGNOSTIC PROGRAM - CARD LISTING

4720410S DSS 167 MARGINING TEST

CONT. SU FO. 215 FO. 214

CARD NUMBER

```
           0         1         2         3         4         5         6         7        8
      123456789012345678901234567890123456789012345678901234567890123456789012345678901234567890

0029
         0  00          0 00  0 0  0  0  0    00    0 0 0 0  0    00    0 0   0  000
           1  1   11   11 1 1  11 11    11  1  1     11 111  1  1 11  1  11  11
        2    2  2 2     2          2    2             2   2     2 2   2   2   2  2  2
                  3 3 3 3 333      3    33     3      3 3 3  3    33      3   3
      4   4
                                                                                     5
               6666  66  66  6   6 6 6 66  66666   6   6       66 6  6 6
       7         7 7        7      77    7   7                     7   7
                 8 8  88     888   8 88888   8 8   8    88   8  8 88  888    8   8
               9 9 9 9 9   9 9 9 9 9 9 9  99 99    999   9    99    99 999   9   9

0030
         0  00     0   0    0000 0      0 000  00 0 0 000     000 00 000    0000 000
           1  1 111 111 1111    1 111111 1   11  1 1 1   11111   1  1   1111    1
        2    2  2  2   2    2222 2      2 222  22 2 2 222     222 22 222    2222 2  2
                33  333 333333  33333333 3   333 333 3   333333 33  33 3333333  33
      4   4
               66  66  6          6              6  6     6     66      6            6
       7         7     7     7 77      77  7777 77   7 777     777 77  7  7  7 77
                     8  8    88  8 8    8   8     8 8  8     8    8  888     88  8
               999 9999999 9 9  99999  99 9  9  99999 9 9  9   999 999 9 9 9 9  99
```

123456789012345678901234567890123456789012345678901234567890123456789012345678901234567890

0 1 2 3 4 5 6 7 8

REV.

COPIE A: TO: | IND. REV.

SECTION: S.P.S. -
LOC.: PREGNANA (MI)

APPR. | COMPIL. MONDUCCI | EMISS. 9 JUL 71 | N.° 4T4720409GA0

Honeywell
Honeywell Information Systems Italia

DIAGNOSTIC PROGRAM - CARD LISTING

4720410S DSS 167 MARGINING TEST

CONT. SU FO. 216 FO. 215

```
CARD
NUMBER      0         1         2         3         4         5         6         7         8
            123456789 0123456789 0123456789 0123456789 0123456789 0123456789 0123456789 0123456789 0

0031

          0  00  0   0  0   0  00 0 0 0     000 00000  0    0     0000 0 00   0 00000
            1  1  111 11 111 11  1 1 1 11111   1     11 1111 11111   1 1  111 1
        2    2  2   2  2   2  22 2 2 2     222 22222  2    2     2222 2 22   2 222  2
                333333 333 333 333 3 33333  333    33 3333 3333333  333 333333
      4   4

                666     6 6     6       6 6    6    6  6 6 6        66
        7        7    7     77 77   7 77 7 777  77      7  7   7  7 77    77 77 777   7
                 8 8 8   8  88    8          88 88 88    8   8     88  8         8
                9 99  9999      999 99 9  9 999   9 99 999 999 9 9 9  999  9    9

0032

          0  00  0    0000 0 0 00 0 0 0  00 0 000 00   0 000   00000 0 0  0 0  0  00
            1  1 11111    1 1 1  1 1 1 11  1 1   1  111 1   1111     1 1 11 1 11 11
        2    2  2    2222 2 2 22 2 2 2  22 2 222 22   2 222    22222 2 2  2 2  2    2
                3333  3 333 3  3 3 33333 333   3 3333 3   3333   3 333 33 33  333
      4   4

                66     6  6  6  6 6         6    6   6          6  6  6  6 6  6 6
        7        7 77  777  77 77 7 7   777   77777 7    7777 77  777   7 77 7  7
                 8   88   8 8  8 8 8 8 8  88 8   88   8  8     888   8 8  8 8  8     8
                99  9 99 99999 9999 99    9999 9999 9 99 9  9  9999 99999 99      9

            123456789 0123456789 0123456789 0123456789 0123456789 0123456789 0123456789 0123456789 0
            0         1         2         3         4         5         6         7         8
```

SECTION: S.P.S. -	APPR.	COMPIL. MONDUCCI	EMISS. 9 JUL 71
LOC.: PREGNANA (MI)			N.° 4T4720409GA0

COPIE A: TO:

IND. REV.

REV.

Honeywell
Honeywell Information Systems Italia

DIAGNOSTIC PROGRAM - CARD LISTING

4720410S DSS 167 MARGININO TEST

CONT. SU FO. 217 FO. 216

CARD NUMBER

```
0                   1                   2                   3                   4                   5                   6                   7                   8
12345678901234567890123456789012345678901234567890123456789012345678901234567890123456789012345678901234567890
0033

 0  00   00 0 0  00 0       00 0 0  00 000 000 0 00  00 0 0  00 00   0   000
   1  1    1 1 11  1 1111111  1 1 11  1   1   1 1  11  1 1 11  1  111 111
2    2  222 2 2  22 2       22 2 2  22 222 222 2 22  22 2 2  22 22   2   2  2
     3 33 3 333333333 333  3 3 33333 333 3 3 3 333  3 3 33333 333333333
4   4

       6   666   6  6     6   6    6 6   66   6  6   6    6 6   6
7        7 7   7  7      7 7 777 7           777   7 777 7      7   7 7
       8  8     88 88     8       88  88 88    8  8       88  8 8 8
         9 99999   999  9 9 999 999  9999999999 9999 999 999  99999  9 9     9

0034

 0  00   0 0 0 0   0 0  0  00 00 00 0     0  000  00 00  000000 00  00 0 00 0
   1  1 1 1 1 1 111 1 11 11  1  1  1 111111 11   11  1  11      1  11  1 1
2    2  22 2 2 2   2 2  2  22 22 22 2     2  222  22 22  222222 22  22 2
     3 333 3 333333  333 33 333333333 33 33 3333333 333333  33 333 3333  3
4   4

       6  6      6  6  6 6   6   6  6        6   6       6   6 6 6
7        7   7 77   7  7  7 7   7       77 77         7  77  7  7 7  7
       8   8      8 8  8   8  8 88 88       8 8  88  8 8 888 8 88   8 8
        9999 99 9 9      99 999  999  9 99  9    9999   99 99  9 99 9 9
```

COPIE A: TO:

IND. REV.

REV.

SECTION: S.P.S. -

LOC.: PREGNANA (MI)

APPR.

COMPIL. MONDUCCI

EMISS. 9 JUL 71

N.° 4T4720409GA0

Honeywell
Honeywell Information Systems Italia

DIAGNOSTIC PROGRAM - CARD LISTING

4720410S DSS 167 MARGINING TEST

CONT. SU FO. 218 FO. 217

CARD NUMBER

```
0         1         2         3         4         5         6         7         8
123456789 0123456789 0123456789 0123456789 0123456789 0123456789 0123456789 0123456789 0

0035

  0  00  0 000  00 00  000000  0  000    0000 0 0  00 0  0  00 0 0 00 0     00
    1  1  1   11  1  11      11 11   1111    1 1 11  1 11 11  1 1 1  1 1111   1
 2    2  2 222  22 22  222222  2  222    2222 2 2  22 2  2  22 2 2 22 2
           33 3333333 333333  333 33   3333  3 333 333333  333 33 3 33333333   3
4   4

         6     6    6         6            6 6 6     6  6 6   6 6   6  6
 7          77           7  77    7 777 77  777  77 7   7  7  7 7 7   7
         88 8 8  88  8 8 888 8  8   8     88   8 8  88 8  8   8     88 88
            9     9999   99 9 9 99 9    9 99 99999 9 9      99 9999   999  9

0036

  0  00  0  0 00 00 0 00 000  000 0 00 00 00 0 00 0000 0  0  00 0      00 000
    1  1 111 1  1  1 1  1   11   1 1  1  1  1 1  1    1 11 11  1 111111  1
 2    2  2  2 22 22 2 22 222  222 2 22 22 22 2 22 2222 2  2  22 2      22 2   2
           33333  3333 3333 333333 3 3 33  3333 3333 33 3 33 333333333 33  3   3
4   4

         6      6    6    6 6    6       6    6    6     6 6    6  6  6  6
 7          7  7 7  7          7  7777  7 7  7        77  7 7  7        7 77
         88  8 8  88   88  88   8     8 8  88   88  88888     88 88   8 8
          9 99 999  99  99999 9 999 999 999  99  99999 999999   999  99 999

123456789 0123456789 0123456789 0123456789 0123456789 0123456789 0123456789 0123456789 0
0         1         2         3         4         5         6         7         8
```

COPIE A: TO:

IND. REV.

REV.

SECTION: S.P.S. -

LOC.: PREGNANA (MI)

APPR.

COMPIL. MONDUCCI

EMISS. 9 JUL 71

N.° 4T4720409GA0

```
CARD NUMBER   0         1         2         3         4         5         6         7         8
              12345678901234567890123456789012345678901234567890123456789012345678901234567890123456789 0
0037
                0  00     0  00 000 0  0  00 0      00 00 00 000 0 0 0 00 0      00 00 0 000
                  1  1  1 11  1   1 11 11  1 111111  1  1  1   1 1 1 1  1 111111  1  1 1
               2    2  2 2  22 222 2  2  22 2      22 22 22 222 2 2 2 22 2      22 22 2 2
                     33 33333 3 3 333333333333 33  3333333 3 333 3 33333333 33  3333 33  33
              4   4

                    6  6     6 6         6  6  6  6       6 6  66 6.  6  6  6  6    6
               7     77 7       7 7  7  7        7 7         7   7   7        7 7  7
                    8     88  8  8  8  88 88   8 8  88 88  8  8     88 88   8 8  88   8
                    9 999  999999999 9   999  99 999    99999999999   999  99 999  99

0038
                0  00   0 00 0                                                    00
                  1    1 1        1
               2    2  22 22
                     333 3                                                        3
              4   4                                                                 4

                   66   6 6 6
               7     7        77
                   88 8  88    8
                    99999999 9999
```

Honeywell
Honeywell Information Systems Italia

DIAGNOSTIC PROGRAM - CARD LISTING

4720410S DSS 167 MARGINING TEST

CONT. SU FO. 220 FO. 219

```
CARD NUMBER   0         1         2         3         4         5         6         7         8
              123456789 0123456789 0123456789 0123456789 0123456789 0123456789 0123456789 0123456789 0
0039
                0  00   0      0      0                                                    00
                   1     1 1       111
              2     2   2 2         2
                        3           3                                                       3
              4   4
                                                                                            5
                      6        6
              7       7   7
                        8     8 8 8 8
                      9           9

0040
                0  00   0    0 0                                                            00
                   1        11 1
              2     2   2    2 2
                             3 3                                                            3
              4   4

                        6     6                                                             6
              7       7        7
                       888 8
                      9    9
              123456789 0123456789 0123456789 0123456789 0123456789 0123456789 0123456789 0123456789 0
              0         1         2         3         4         5         6         7         8
```

COPIE A: TO:

IND. REV.

REV.

SECTION: S.P.S. -

LOC.: PREGNANA (MI)

APPR.

COMPIL. MONDUCCI

EMISS. 9 JUL 71

N.° 4T4720409GA0

Honeywell
Honeywell Information Systems Italia

DIAGNOSTIC PROGRAM - CARD LISTING

4720410S DSS 167 MARGINING TEST

CONT. SU FO. 221 FC. 220

CARD NUMBER

```
0                   1                   2                   3                   4                   5                   6                   7                   8
12345678901234567890123456789012345678901234567890123456789012345678901234567890123456789012345678901234567890
0041

  0  00  0   0 000 0 0  0  0000 0  0  00 0 0  000  0 00 0 0  00 00  0  000000
    1  1    11 1  1 1 11 11    1 11 11  1 1 11   11 1  1 1 11  1  11 11
 2    2      2 222 2 2  2  2222 2  2  22 2 2  222  2 22 2 2  22 22  2  2222
          3  33 3 333 33 3333  3333 3 3 333 333  3333 3333 3 3 33333 3333    3
4   4

        666       6  6 6         6   6  6  6   66   6 666  6  6   6
 7       7     777   7  7  7 77    7 777   7 777    7 7   7 777     7  7 77   7
        888 8      8 8      88  8 88     8 8 8 8   8      8     88      88
        9   9    99999 99 9 9  9999  9 99999    99  999999  9 999  99 9 9

0042

  0  00  0 0    00 00 000 0  0 00     00 0 0  0  0000 0    00 0 0  000    000
    1  1 11 1111  1  1   1 11 1  11111  1 1 11 11    1 1111  1 1 11   1111
 2    2    2    22 22 222 2  2 22     22 2 2  2  2222 2    22 2 2  222    2
          333333 3 3333 333 3333 33333 3 333333 3333  33333 3 333333  333333  3
4   4

        66  6  6  6            6 6   6  6              6  6  6    6 6
 7       7     777    77  77  7 7  7 777  7  77  7 77     777  7   7   77
        88 8 8     88 8 8 88 8    8      8 8     88  8 8     8 8  8 8    8   8
        999999 9 999    9     999999 9 9999  99 9 9  9999 9 9999    9   9
```

COPIE A: TO:

IND. REV.

REV.

SECTION: S.P.S. -

LOC.: PREGNANA (MI)

APPR.

COMPIL. MONDUCCI

EMISS. 9 JUL 71

N.° 4T4720409GA0

Honeywell
Honeywell Information Systems Italia

DIAGNOSTIC PROGRAM - CARD LISTING

4720410S DSS 167 MARGINING TEST

CONT. SU FO. 222 FO. 221

```
CARD
NUMBER      0         1         2         3         4         5         6         7         8
            123456789 0123456789 0123456789 0123456789 0123456789 0123456789 0123456789 0123456789 0
0043
                                                                                                  00
   0  00     00        0
     1  1  1  1111111 1111111111111111111111111111111111111111111111111111111
  2     2  2 22        2
             3 33333   3333333333333333333333333333333333333333333333333333333  3
4   4

          6  6 6   6  6
 7        7 7 7  7 7
               8     8
            999999 9  9                                                                           9
0044
   0  00                                   0  0 00 0  00       0 0  0 0   0 00 00 0
     1  1 1111111111111111111111111111  1     1 1 1  111111 1 11 1 111 1  1
  2     2  2                             2        2 22       2 2  2 2   2 22
             333333333333333333333333    3  3   3  3333   33 3 33 3 33333333
4   4                                                                                             4

          6                              6 6 66   6          6 6 6
 7        7                               7 7 777777    77  7  7 7 77   7
                                        8  88 88   8 88   8     8    8  8 88
            9                            9 9999         999   99999999  99 9
```

COPIE A: TO:

IND. REV.

REV.

SECTION: S.P.S. -

LOC.: PREGNANA (MI)

APPR.

COMPIL. MONDUCCI

EMISS. 9 JUL 71

N.° 4T4720409GA0

```
CARD NUMBER   0         1         2         3         4         5         6         7         8
              123456789 012345678 901234567 890123456 789012345 678901234 567890123 456789012 345678901
0045
                0  00   00  0 0   0  000       00  0      0000  0000   0  00 0 0   0 0   0  000 00
                  1  1    11 1 11 11   111111  11 11111     11     11 11  1 1 11 1 11 11    1    1
              2     2  22  2 2  2  222       22  2      2222  2222  2  22 2 2  2 2  2  222
                       333 3 33 3333 333  33333333        33333333 333 333 3333 33 333  3
            4   4                                                                                4

                     6   6  6   6   6                   66              6  6 6    6     66
              7      7  7    7 7             7 777  7 77  7  7  7  7 77   77   7  7 777
                      888 8    8  88    8  8  8      88    8 88  8     8 8  888    8 8
                         99999 999 999 9      9      9 999 9 999 99  99999 9 9  99    99

0046
                0  00  0  0 00 0 00000 0    0 0  00 00  00 00 0000  00 0 0 000 00 0       00
                  1  1 111 1  1 1     1 1111 1 11  1  11  1  1    11  1 1 1   1  1 111111
              2     2  2  2 22 2 22222 2    2 2  22 22  22 22 2222  22 2 2 222 22 2          2
                       3333 3333    33 333333 33  33 33  33 333  333 333 3   3333 333333
            4   4                                                                                4

                     6     6 666      6   6    6    66              6  66       6
              7      7    7 7   7777   7 7   7  77     7   7  7  7 77   7 777 7   7  7 7
                      8  8      8 8 8      888     8  888 88 8 88     8 88 8   8    8
                      9   999999   99999  9 9  9  99999 999    999  9999999 9   999 99

COPIE A:
TO:
IND. REV.
```

SECTION: S.P.S. -	APPR.	COMPIL. MONDUCCI	EMISS. 9 JUL 71	N.° 4T4720409GA0
LOC.: PREGNANA (MI)				

REV.

Honeywell
Honeywell Information Systems Italia

DIAGNOSTIC PROGRAM - CARD LISTING

4720410S DSS 167 . MARGINING TEST

CONT. SU FO. 224 FO. 223

CARD NUMBER

```
0123456789012345678901234567890123456789012345678901234567890123456789012345678901234567890
0047

  0  00    0 0  00 00 0 0  00 00 00  000 0  0    0 0      00  0     0 0 0  00
    1  1  1 1 11  1  1 1 11  1  1  11   1 11 1111 1 111111  11 11111 1 1 11
 2    2  2 2 2  22 22 2 2  22 22 22  222 2  2   2 2      22  2     2 2 2
          333 33 33  3 3 33333 333333 333 33 3333 3 333  3  33333   3333 33   3
4   4                                                                        4

        6 6   6  6  6    6                  6
 7      77   7   7 7 777 7       7  77   7 777  7  7     77 777  7  7  777
          888 888 8       88  8 8  88 8 8  888 88     8  8  8      8 8 888
        9 9 9999 9 999 999  9999    99 99 9       99  9    9 9      99

0048

  0  00     00 0     00 00 0000   00 0   00 00  0  0 0  0 0     0  0 0000 00
    1  1 111  1 11111  1  1    111  1 111  1  11 11 1 11 1 11111 111 1    1
 2    2  2  22 2     22 22 2222   22 2   22 22  2  2 2  2 2     2   2 2222
          33  33333333 33 333  333  333333 33333 33 3333 33333333333 3   33
4   4                                                                        44

        6      6  6    6         6   6     6 666  66   6    6   6
 7      77       7 7   77   7 7 77   7 77   7  7      77 7     7777
          88 8    88   8888  8  8     88          8      88  8 8 88
        99 999 9 9  9   999 9 9  9 9 9  999  99 9999999999  9 9    999
```

COPIE A:
TO:
IND. REV.

REV.

SECTION: S.P.S. -
LOC.: PREGNANA (MI)

APPR.

COMPIL. MONDUCCI

EMISS. 9 JUL 71

N.° 4T4720409GA0

```
CARD NUMBER   0         1         2         3         4         5         6         7         8
              12345678901234567890123456789012345678901234567890123456789012345678901234567890123456789 0
0049
                0  00  000       0 0  0000  00 00  00000 00  00    0 0 0  00 00      000 00
                  1  1    1111111 1 11    11  1  11     1  11  1111 1 1 11  1  111111   1
               2    2  222       2 2  2222  22 22  22222 22  22    2 2 2  22 22      222
                       33333333333 33  3333333 333333  3  33 33333 3 3 33  3 3333  333 3
              4   4                                                                      4
                                                                                         5
                      6         6         6    6                  6  6       6         6
               7      777 7  7 7   7   77          7  77 77  77777  7     7   77      7
                       8 8  8    888 888 8  88  8 8 888  8  88   8 8   8  88      8  8
                      9   9 99  9 9999 9    9999   99 9  9 99  9 9999 99 999  9 9    9

0050
                0  00  0 0     00   0  000 0 00   0000 0 0 0 00 0  0   000 00   0 000 0 00
                  1  1 11 11111  111 11   1 1  1111    1 1 1 1  1 11 111   1  111 1   1 1
               2    2  2 2     22   2  222 2 22    2222 2 2 2 22 2  2   222 22   2 222 2
                       3333     333 33  3333 333333 33333 3333 333333333 33  333 333 3 3
              4   4                                                                      4
                      6             6 6 6    6 6                 6      6 6       6   6      6
               7      77777  7 7   7   7    7 7  7  77 7   7  77  77  7   777   7   7   7
                       88     88 8    8 8 8    8  88 8 8 8 8    8  8   8   88 8   8   8
                      999     999999   9   999999 9  99  99   99999   9  9999999   9 99
```

12345678901234567890123456789012345678901234567890123456789012345678901234567890123456789 0									REV.
0	1	2	3	4	5	6	7	8	

COPIE A: TO:

IND. REV.

SECTION: S.P.S. -	APPR.	COMPIL. MONDUCCI	EMISS. 9 JUL 71	N.° 4T4720409GA0
LOC.: PREGNANA (MI)				

Honeywell
Honeywell Information Systems Italia

DIAGNOSTIC PROGRAM - CARD LISTING

4720410S DSS 167 MARGINING TEST

CONT. SU FO. 226 FO. 225

CARD NUMBER

```
0         1         2         3         4         5         6         7        8
12345678901234567890123456789012345678901234567890123456789012345678901234567890
0051

  0  00   0 00 0  0   0 0  0 00   000  00 0 000 0 0  0 0 00 0      0 0  00000
    1  1   1  1 11 111 1 11 1  111   11  1 1  1 1 11 1 1  1 111111 1 11
 2    2  22 22 2  2   2 2  2 22   222  22 2 222 2 2  2 2 22 2      2 2  222
         333 33333333 3333333 3333 333  3 3  33 3 33 333333 33333333 33
4   4                                                                    4

        66    6      6 6 6      6 6    6   66  66          6     6       6
 7      7   77  77    7   7  77 7   77 7 77   777 77 7   7 7   7 7   7   7    7
        8 8    8  8 8 8 8  8      8    8       88   8 8  8   8    888 888
            99999  9  9 99   9  9   9 999 99  99999 99    99 99  9 9999 99

0052

  0  00    00 0 000 000 000 0   00000   0  00                              00
    1    11  1 1   1   1   1 111     111 11
 2    22 2 22 2 222 222 222 2   22222   2  22
         3333 33333 33333 3 333  3  333333 3
4   4                                                                    4

        66    6 6   6 6   6
 7      7 7  7  7    7  7     77 7 7 77  77
       88  88   888  88 8   8  88 888    88                              8
         99  99   9999    9 99 9 9  99    99

123456789012345678901234567890123456789012345678901234567890123456789012345678901
0         1         2         3         4         5         6         7        8
```

COPIE A: TO:

IND. REV.

REV.

SECTION: S.P.S. -

LOC.: PREGNANA (MI)

APPR.

COMPIL. MONDUCCI

EMISS. 9 JUL 71

N.° 4T4720409GA0

Honeywell
Honeywell Information Systems Italia

DIAGNOSTIC PROGRAM - CARD. LISTING

4720410S DSS 167 MARGINING TEST


```
CARD
NUMBER
         0         1         2         3         4         5         6         7         8
         123456789 123456789 123456789 123456789 123456789 123456789 123456789 123456789 0
0053
   0  00  0 0  0  0  0  0  0 0000   0  0000 0  0 0  00 0 0   0 0  0 0000 0 000
     1  1  1 11 11 11 11 11 1    111 11    1 11 1 11  1 1 111 1 11 1    1 1
  2    2    2  2  2  2  2  2 2222   2  2222 2  2 2  22 2 2   2 2  2 2222 2 2
            3  3  3  3  3  3    333 3333  3333 3 333 333 33333 33 3   33333
4   4                                                                        4

         66 6  6  6  6  6  6   66  6         6       6  6  6    6   6
 7       77 7  7  7 77 77 77 77  7  7  7 77    7  7 77   7 7   7  7 7 77  7
         88   8  8       8  88         88  8 88 8     8 8   888    8 8  8 8
          999  9 99  9 99  9 9 999 99 9 9  9999  99  99999  9 9  99 99 99 99   9

0054
   0  00  0  0  0000 0   0    00 0  000000   0  0 0 00   0 0 00 0 0   000 00 0
     1  1 111 11    1 111 11111  1 11      111 11 1 1  1111 1 1  1 1 111   1
  2    2     2  2222 2   2     22 2  222222   2  2 2 22    2 2 22 2 2   222
          333 3333  33333333333 33 3333 3  333 33 333 33333 3333 33333333 33
4   4
                                                                        5
         6  6         6   6   6        6      6      6 6         6     6 6
 7       7  7  7 77       7   7 77 7 77 7   7  77  7 7  7  7  77  7  7   77
         8       88  8 8 8   8 88    8 8888 8      8    8  8 8    8 8   8
            99 9 9  9999 9 9 9   99    9 999999 99  999999 99   9999   9   9
```

COPIE A:
TO:
IND. REV.

REV.

SECTION: S.P.S. -
LOC.: PREGNANA (MI)

APPR.

COMPIL. MONDUCCI

EMISS. 9 JUL 71

N.° 4T4720409GA0

Honeywell
Honeywell Information Systems Italia

DIAGNOSTIC PROGRAM - CARD LISTING

4720410S DSS 167 MARGINING TEST

CONT. SU FO. 228 FO. 227

CARD NUMBER

```
0         1         2         3         4         5         6         7         8
12345678901234567890123456789012345678901234567890123456789012345678901234567890
0055

  0  00      0 0  0 0 000    00  00 0  00 0 0   0 0  0    0  0 0  0  0    00
    1  1  111 1 11 1 1   1111  11  1 11  1 1 111 1 11 1111 111 1 11 11 1111   1
 2    2      2 2  2 2 222    22  22 2  22 2 2   2 2  2    2   2 2  2  2
         3333 333333 3   3333  33  3 333 333 33333 33 33333333 3 33 3333333
4   4
                                                                            5
        6   6 6 6  6              66     6  6  6     6     6           6
 7      7    7   7    7777 77    7  7  77   7 7   7 77      7 7 77 77   7 7
        8  8 8 8  8 8  8     88  8        8 8   888  8    8        88 8   8
        99 9  9 99 99 9  9  9999 999 9  99999  9 9  99    9 9 99 9    9 9

0056

  0  00    000  00  0        0  000    0  00 0  0  00 0 0   000   00  0000000
    1  1 11   11  11 11111111 11   1111 11  1 11 11  1 1 111   111  11
 2    2    222  22  2        2  222    2  22 2  2  22 2 2   222   22  22222   2
         33 333333333333333 33   3333 33  3 33 333 333 3333 33333333  3
4   4
                                                                            5
        6 66       6                     6  6 6    6  6  6 6          6
 7      7      7 7            7 777 77   7 77 7 7 77  77 7   77 7    77  7
        88  88  8   8        8   8     8  8           8 8   8     88 88 8 8
        9 99 9     9        99 9    9 99 999 9999  99999  9   9 9 9 9 999

123456789012345678901234567890123456789012345678901234567890123456789012345678901
0         1         2         3         4         5         6         7         8
```

COPIE A: TO:

IND. REV.

REV.

SECTION: S.P.S. -

LOC.: PREGNANA (MI)

APPR.

COMPIL. MONDUCCI

EMISS. 9 JUL 71

N.° 4T4720409GA0

```
CARD
NUMBER
         0         1         2         3         4         5         6         7         8
         123456789 123456789 123456789 123456789 123456789 123456789 123456789 123456789 0

0057

  0  00  000 0   00 00 0 0   0 00  00 0 0  00 000 000 0 00   00 0 0 0 00 0 00
    1  1    1 111  1  1 1 111 1  11  1 1 11  1   1   1 1  111  1 1 1 1  1 1
 2    2   22 2   22 22 2 2   2 22  22 2 2  22 222 222 2 22   22 2 2 2 22 2
       3  3 333333  3 33333333333  3 3 33333 333 3 3 3 3333 33 3 3 333333   3
4   4                                                                       5
        6    6         6           6   6     6 6   66    6 6  6       6
 7      7     7     7777  7 7    7 7 777 7            777    7 7 7777  7
        8888     88  8 8 8   8 88 8       88  88 88    8    8     8 88 88
        9999999   99 99   9 9 9999 999 999  9999999999 9999 99 9999     999

0058

  0  00  0     00 0 0 0 00 00 0  0 0 0   0  00 00        0 00 000000     0 00
    1  1 111111  1 1 1 1  1  1 11 1 1 111 11  1  11111111 1  1      11111 1
 2    2        22 2 2 2 22 22 2  2 2 2   2  22 22        2 22 222222     2
       33 333  3 3 3 3333 33333 3 33333333333  33333333 3  3 3 33 3333333
4   4                                                                       4
                                                                            5
        6 6     6          6   6 66          66   6   6     66     6 6  6
 7      77   7 7 777777           77 7 7 7 7  777     7   7  7 77 7  7
        8  8   8      8 88  8 8    8 8   8 8  8  8  8  88 8   88 88  8  8
        9    9 999 99    9999  9 999999 9 99 99 999  9 99  99999  9  9  99

         123456789 123456789 123456789 123456789 123456789 123456789 123456789 123456789 0
         0         1         2         3         4         5         6         7         8
```

COPIE A: TO:

IND. REV.

REV.

SECTION: S.P.S. -

LOC.: PREGNANA (MI)

APPR.

COMPIL. MONDUCCI

EMISS. 9 JUL 71

N.° 4T4720409GA0

Honeywell
Honeywell Information Systems Italia

DIAGNOSTIC PROGRAM - CARD LISTING

4720410S DSS 167 MARGINING TEST

CONT. SU FO. 230 FO. 229

```
CARD NUMBER   0         1         2         3         4         5         6         7         8
              123456789 0123456789 0123456789 0123456789 0123456789 0123456789 0123456789 0123456789 0
0059
                0  00    0  000  0 00 00 00 0000  00 0  0   000 0 0  0 0 000 00 00 0  00 00
                  1  1  1 11   11 1  1  1  1    11  1 11 111   1 1 11 1 1   1  1  1 11  1
              2    2    2  222  2 22 22 22 2222  22 2  2   222 2 2  2 2 222 22 22 2  22
                     333333   3333  3333333 3 333 333333333   3 3 3333 3 3 3  3333 33333
            4   4
                                                                                        55
                     6    66    6       6   6 6 6    6   6  6   6  6 6    6   6     6
            7        7    7  7   7 7        7  7 7  7   7 7 77  7     7 77 7 7   77  7
                      8 88   88 8 .88 88  888   8 8  8   8 88     8       8  88  8 88
                     99  9 99999 999    9999 9 99 9 9 9 9 99 999  9  9 9 999  999   9
0060
                0  00   0     0  00 00   000000 0 0 0  000 0 0  000   0 0000  0  0 00 00 00
                  1  1 1 11111 11  1  111      1 1 1 11   1 1 11   111 1    11 11 1  1  1
              2    2   2     2  22 22   222222 2 2 2  222 2 2  222   2 2222  2  2 22 22
                     33333 33 33333 3333  3   3 3 3333   3 3 333 3333 33  33333333  3333
            4   4
                                                                                        5
                        6        6       6   6     6  66  66  6 6 6              6      6
            7        7      77         77  7 7   7   77  77  7 7       77  77    7 7  7
                     888 8     88  8  88 8 88   8 8   8       888   8 88 8  8 88 8  88
                      99   99   9999  9 999 999 99  9 999 9999   9 99   99 99999 999  9
              123456789 0123456789 0123456789 0123456789 0123456789 0123456789 0123456789 0123456789 0
```

COPIE A: TO:

IND. REV.

REV.

0	1	2	4	6	8
		MONDUCCI	9 JUL 71	4147204 09GA0	

SECTION: S.P.S. -

LOC.: PREGNANA (MI)

APPR. | COMPIL. | EMISS. | N.°

Honeywell
Honeywell Information Systems Italia

DIAGNOSTIC PROGRAM - CARD LISTING

4720410S DSS 167 MARGINING TEST

CONT. SU FO. 231 FO. 230

CARD NUMBER

```
0                   1                   2                   3                   4                   5                   6                   7                   8
12345678901234567890123456789012345678901234567890123456789012345678901234567890123456789012345678901234567890
0061

  0  00  00 000 0000 000 0 00 0000 0 0 0 0 0 000 0 0000 00 0000 0   0 0 0000
    1  1  1   1    1   1 1  1    1 1 1 1 1 11   1 1    1  1    1 111 1 1
 2    2   2 222 2222 222 2 22 2222 2 2 2 2 2  222 2 2222 22 2222 2   2 2 22
       33 33333 33 333 3 3 33  3 3 3 333 3 33   3 3 3  3333 3333333 333333
4   4                                                                      5
          6 6   6 66   6         6 6     6     6  6  6 6    66  6  6 6   6
 7       7  7     77 7  7777  777   777 7   7 7 77  7 7 7  7 7 7     77  7    7
         8  888  888  8     8 88     8 8   8  8 88   88  88  888 88 88 8 88
         99   9999  9 999 999 9  9 9999999 99 99 999 9999  99   999   99

0062

  0  00  00 000 0  0   0 0 0 0 0 0 0   0 0 0   00   0 0  0  0 00  0 0 00  00
    1  1 1 1   1       11     111   111       11     11  1   1   111  1
 2    2   2 222   2     2 2   2 2     2       2      2    2 2   2 2
       3333 33 3        3   3 3 3 3   3   3   333 3   3  3    33  3 3  3
4   4                                                                      5
         6  6 6    6       666    66      66     6 666       6 6 6 6   6
 7            7     7     7 7     7    7  7   7    7        7
         8  88 8 8   8   888  88 888    88 8  88 88      8 8   88      888   8
         9999     9 9  9   9  99 9   9   9        9 99 9     9   9 9 9
```

COPIE A: TO:

IND. REV.

REV.

SECTION: S.P.S. -

LOC.: PREGNANA (MI)

APPR.

COMPIL. MONDUCCI

EMISS. 9 JUL 71

N.° 4T4720409GA0

Honeywell
Honeywell Information Systems Italia

DIAGNOSTIC PROGRAM - CARD LISTING

4720410S DSS 167 MARGINING TEST

CONT. SU FO. 232 FO. 231

CARD NUMBER

```
0         1         2         3         4         5         6         7         8
123456789 0123456789 0123456789 0123456789 0123456789 0123456789 0123456789 0123456789 0
0063
  0  00     00    0 0  0    00    0 0  0    00    0 0  0    00     0   0 000
    1  1     1     11  1     1   111  1     1    111  1     1     11  11
 2    2           2 2          2    2          2  2 2           2 2   2
        33   33 3   3  3    33  3   3  3   333 3   3  3   333 3   3   3
4   4
                                                                        5
          6666 6  6        66  6  6        66  6  66       666    66        6
7          777 7  7        77  7  7       777 7  77       77     77
            888 8  8    888 888 8       888 8 888       888 8 888
        99  9 9    9 9             9 9      9 9   99 9         9  999 9 9 9    9
0064
  0  00   0    00      0  0   00      0  0    00      0  0    00    0 0   00 0
    1  1 11     1    111  1    1    111  1    1    111  1    1     11  1
 2    2                2             2        2   2 2           2 2
        333     33 3   3  3   333 3 3 3  3   333 3 3 3  3   333 3 3 3
4   4

          6   666 6  6        66  6  66       66  6  66       666    6         6
7            777 7  7        77     77       777 7  7        77  7  77
          8888 888 8       888 888 8  8   888 8 8 8       888 8 888
        9      9   999 9        9  9 9 9      9   9 9 9        9  999 9 9
```

```
123456789 0123456789 0123456789 0123456789 0123456789 0123456789 0123456789 0123456789 0
0         1         2         3         4         5         6         7         8
```

COPIE A: TO:

IND. REV.

REV.

SECTION: S.P.S. -

LOC.: PREGNANA (MI)

APPR.

COMPIL. MONDUCCI

EMISS. 9 JUL 71

N.° 4T4720409GA0

Honeywell
Honeywell Information Systems Italia

DIAGNOSTIC PROGRAM - CARD LISTING

4720410S DSS 167 MARGININO TEST

CONT. SU FO. 233 FO. 232

CARD NUMBER

```
0         1         2         3         4         5         6         7         8
123456789 0123456789 0123456789 0123456789 0123456789 0123456789 0123456789 0123456789 0
0065
  0  00  00 00    00    0 0  0    00    0 0  0    00      0  0    00      000
    1  1  1  1     1    111  1     1    111  1     11    11  1     1    111   1
 2    2  2          2    2          2   2 2              2        2   2 2
        333  3    3  3   3  3    33  3   3  3    33  3 3 3  3    33  3   3
4   4

        6  6   666    66       66  6  66       66  6  66       666    6     6
7              777    77       77  7  77       777    7        77  7  77
        8   8 8 888 8       8 8 888 8  8    8 8 8 888 88    8 8 8 8 8 88
       99 9  9   9    999 9  9        9 9 9  9   9 9   99 9  9         99
0066
  0  00  0  0  0 0 0 0  0    0 0  0    0 0  0    00  0 0 0   0 0 00    0 0 00
    1  1 1  1  1  11    1    11  1    111  1    11    11  11       111
 2    2       2 2 2    2   2 2  2      2  2    2    2 2  2       2 2 2    2
       33  3  3   3    3     3  3      3  3    3     3  3   3 3  3
4  4

        6    6 6   66  6 66       666    6 666  66 6       6        6   6
7       7      7       77       777      777  7              7    7
          8   8    8 888 8    8 8 8    888 888 8 88       8 8    88
       9 9   9   9 9    9   99 9      99 9  9     99  9 9 9 9    9 9
```

COPIE A: TO:

IND. REV.

REV.

SECTION: S.P.S. -

LOC.: PREGNANA (MI)

APPR.

COMPIL. MONDUCCI

EMISS. 9 JUL 71

N.° 4T4720409GA0

Honeywell
Honeywell Information Systems Italia

DIAGNOSTIC PROGRAM - CARD LISTING

4720410S DSS 167 MARGINING TEST

CONT. SU FO. 234 FO. 233

```
CARD
NUMBER      0         1         2         3         4         5         6         7         8
            123456789 0123456789 0123456789 0123456789 0123456789 0123456789 0123456789 0123456789 0
0067
            0  00    0 0 0     0   0   0    00  0  0     0      0  0     0      0  0   00
              1  1  1 111 1 1 1 1 1 11  1 11    11  1 11     11  1  1 11   111  1  1
          2    2   2 2 2       2   2   2 2   2 2    2 2     2       2 2     2
                333 3 33   3  33  33  3 33    33    33  3 3 3  3    33  3   3  3       3
          4   4

                 6      6    66  666 66  6  666    66   666        66   66            6
           7     77    7     7  77  7  7    7   77  7  7        77    7        7
                8   88  88 8  88      8  8 88 88 8  8888888    8 8  888888     8 8
                 9  99 9      9       9 9     9 9 9 9   99 9 9  9 9 9 9 9999 9  9 9
0068
            0  00     0       0   0 000     0 00   0    0    0  0 00  0 00  0  0  00  00
              1  1 1 11    111  11   1 11             11   11  1  1     1  1 1    1
          2    2    2 2   2 2   2   2 2 2     2 2   2 2 2       2     2     2
                33 33  3   3   3  333   3   3 3 3 3  33   3 3   3     3 3  33   3 3
          4   4                                                                      4

                666   66        6 6                  6       6  66 6    66 66       6
           7     77  7  77        777        777  77  7    7     7  7  777  7
                88 888888          8  8 8 8 88 88  8   88 8 88888 8 88  88 88   8 8
                   9 9 9999 9 9 9 999 9      99   999 9      9    99     9 9 9   9
```

COPIE A: TO:	IND. REV.								REV.

SECTION: S.P.S. -	APPR.	COMPIL. MONDUCCI	EMISS. 9 JUL 71	N.° 4T4720409GA0
LOC.: PREGNANA (MI)				

Honeywell
Honeywell Information Systems Italia

DIAGNOSTIC PROGRAM - CARD LISTING

4720410S DSS 167 MARGINING TEST

CONT. SU FO. 235 FO. 234

```
CARD NUMBER   0         1         2         3         4         5         6         7         8
              123456789 0123456789 0123456789 0123456789 0123456789 0123456789 0123456789 0123456789 0
0069
                0  00   00 00   0 000 00   0 00   0       0   0 0   00   0    00   0 00   0    00    00
                  1  1   1  1   1   1  1      1    11    1   1  1   1     1   11   1 1     1   11
              2     2           2   2         2    2 2          2 2         2                2
                      333   3 33   33   3     3    3   3 3 3     3 3    3333 333 3    3333
              4   4
                                                                                                    5
                      666      6   666 666666 6 66    6     66    66 6            6 6             6
              7       777     77   7 7 7 7 77 7 77     7   7 7     7 77        7 77 77
                     888 88 8    88888 88888    88 8    888 8 8 8    8 888 8 888   88 888
                      9   9 9    9 99    999 9     9 9 9   9999       99       9 9    99

0070
                0  00   0 00   0   0   0    0 00    00   0   0   0    0 00    0      0      0     000 00
                  1  1 1 11   1 11   1 111   1    11   1 11   1 111    1   11    1      1      1
              2     2   2  2     22     2 2 2      2   2 22     2 2 2    2    2 2    2 2    2    2
                    3 3 3333 33 3   3 3333    3 3333 33 3   3 33333   3      3      3      33
              4   4
                        6   6666    66          6    666    66       66 66666   66666 6666 66    66
              7        77   7777   777         77   7777   777       7   7777    7 7    7   777
                    8 888  88 88  88 88 888    888 8    88 88 88 888   888    888 8      88   88
                        9    9      9  9         9    9      9  9       9      9    9      999999
```

0	1	2	3	4	5	6	7	8

COPIE A: TO:

IND. REV.

REV.

SECTION: S.P.S. -

LOC.: PREGNANA (MI)

APPR.

COMPIL. MONDUCCI

EMISS. 9 JUL 71

N.° 4T4720409GA0

Honeywell
Honeywell Information Systems Italia

DIAGNOSTIC PROGRAM - CARD LISTING

4720410S DSS 167 MARGINING TEST

CONT. SU FO. 236 FO. 235

```
CARD NUMBER   0         1         2         3         4         5         6         7         8
              123456789 0123456789 0123456789 0123456789 0123456789 0123456789 0123456789 0123456789 0

0071

                0  00   0   00     0    000 0   00     0    000 0   00     0    000 0   000
                  1  1   1   1     1      1  1   1     1      1  1   1     1      1  1
               2    2  2   2 2   2 2   2   2   2 2   2 2   2   2   2 2   2 2   2   2   2 2
                     3    3 3   3  3   3  33    3 3   3  3   3  33 3   3 3   3  3   3 333 3   3
             4   4

                       6   6  6 666 6 66 666   6  6 666 6 66 66    6  66666 666  66    6   6
              7        7      7 7   7  777 7      777   77 777       7 7   7   77          7
                     8 88 8888        88 8888 8888       88 88 8 8888 8     88  88 8 88
                     99 9 9           9 99999 9    9     999999 9 9          9 99999 9

0072

                0  00   0     0    000 0   00     0    000 0   00     0    000 0   00    00
                  1  1 11     1      1  1   1  1  1  1   1  1   1  1  1  1   1  1   1  1
               2    2  2   2 2   2   2   2 2     2       2   2 2     2       2   2 2
                     3 3   3  3   3 333 3   3 3     3    333 3   3 3     3    333 3   3 3
             4   4

                     66666 666  66    6  6 666 6 6  66    6  66666 666  66    6  666  6
              7      777   77  77        777   77  77       7 7   7   77 7      777
                     8888 8     88  8888 8888        88 8888 8888        88 88 8 8888 8    8
                     9    9     999999 9 9           9 99999 9    9     999999 9 9
```

COPIE A:
TO:
IND. REV.

REV.

SECTION: S.P.S. -
LOC.: PREGNANA (MI)

APPR.

COMPIL. MONDUCCI

EMISS. 9 JUL 71

N.° 4T4720409GA0

```
CARD NUMBER   0         1         2         3         4         5         6         7         8
              12345678901234567890123456789012345678901234567890123456789012345678901234567890123456789 0

0073

                0  00  0 0    000 0    0    0    000 0    0    0    000 0    0    0    00
                  1  1  1  1   1  1   1  1  1  1   1  1   1  1  1  1   1  1   1  1  1  1
               2    2  22       2   2 2    2       2   2 2    2       2   2 2    2
                     3  3    333 3  333  3  3  3 333 3  333  3  3  3 333 3  333  3  3  3
              4   4

                      66 666  66       6 666 6 6  66       66666 666  66       66666 66  6
               7         77 777 7  77  7 7   7  777 7  77  7 7   7  777 7  77  777   77
                     88    88  88 8  888 8     88  8888  888       88 8888  888
                     99     9 99999      9    999999 9            9 99999      9    9  9

0074

                0  00  0 000 0    0    0   000 0    0    0    000 0    0    0    000 00 0
                  1  1 1   1  1   1  1  1  1   1  1   1  1  1  1   1  1   1  1  1  1   1
               2    2  2   2   2 2   2 2   2   2   2 2   2 2   2   2   2 2   2 2   2   2
                     3  333 3  333    3    333 3  333    3    333 3  333    3    333
              4   4

                      6  666     6 666 6 66 666     6 666 6 66 666     66666 6666 66
               7     7 777    77  7 7   7   77    77  777   77  77    77  777   77  77   7
                     8 88 88 8  888 8    88  88 8  888 8    88  8888  888       88 88
                     9 99999 9           9 99999     9    999999 9            9 999
```

SECTION: S.P.S. -	APPR.	COMPIL. MONDUCCI	EMISS. 9 JUL 71
LOC.: PREGNANA (MI)			N.° 4T4720409GA0

COPIE A: TO:

IND. REV.

REV.

Honeywell
Honeywell Information Systems Italia

DIAGNOSTIC PROGRAM - CARD LISTING

4720410S DSS 167 MARGINING TEST

CONT. SU FO. 238 FO. 237

CARD NUMBER

```
0         1         2         3         4         5         6         7         8
123456789 0123456789 0123456789 0123456789 0123456789 0123456789 0123456789 0123456789 0
0075
  0  00   0    0     0    00    00      0  0    00      0  0  0 00  0 0 00 00
    1  1   1   1  1  1  1  1     1     11  1     1    111  1    1   111  1    1
 2    2  2  2 2   2 2   2       2 2 2 2 2       2 2 2   2     2 2   2 2
        3 3  333  3  3  3 333    3      3  33   33    3 3  3    33  3 3  33
4   4

          6      6 666 6 66   66    666       666   66        6 6 6 6   6
 7       77   77  7 7   7    7 7 7 7  7      7 7   7  7        7                7
          88  888       888 8 8 8888 8    888 888888 8    8 8   88       88
         999      9    999 9  9  9   99 9     9  9   99 9     9   9 9 9  9

0076
  0  00      00      0  0   00      0   0 00    00      0  0     0      0 00
    1  1 1   11     11  1   11    111  11  1    11     11  1     1    111
 2    2  2    2 2 2 2       2 2 2   2   2      2 2 2 2 2        2 2   2    2
        3    33      3  33    3    3 3   3  33   33      3  33   33    3 3
4   4

          66    666       66    66        6   666   666       66    66
 7       77 7   7  7      7 7 7 7  7        7 7  7  7      7 77  7  7      7
          88 8 8888 8    8 8 8 8888 8       8 8 888888 8    888   8888 8
             99 9   99 9  9  99 9   99 9 9 9    99 9   99 9  9     9   99 9

1234567890123456789012345678901234567890123456789012345678901234567890123456789 0
0         1         2         3         4         5         6         7         8
```

COPIE A:
TO:
IND. REV.
REV.

SECTION: S.P.S. -
LOC.: PREGNANA (MI)

APPR.
COMPIL. MONDUCCI
EMISS. 9 JUL 71
N.° 4T4720409GA0

Honeywell
Honeywell Information Systems Italia

DIAGNOSTIC PROGRAM - CARD LISTING

4720410S DSS 167 MARGINING TEST

CONT. SU FO. 239 FO. 238

CARD NUMBER

```
0077

  0  00  0  0 0 0 00    0 0  0    0 0   0 00    0 0  0      0   0 00      000
    1  1   11  11  1     11  11    11  11  1    111  1     11  11  1    111
 2    2  2  2   2   2     2       2 2   2   2   2 2   2   2 2   2   2   2 2
       3   3   3  3      3  3    3 3   3  3    3 3  33  3  3   3  33  3  3   3
4   4

              6   6 6 666       666       6 6 666     6 6 6       6 6 6
 7       77         7 777     7 77           777       7            7 7    7
         8          8 8 8     8 8 88       888 88    888  8       888  8
         9 9 9 9 9     999 9     9 9 9 9 9  9  999 9      99 9 9 9       9

0078

  0  00  0  0    0 0  0  0 0 0 0  0  0 00  0   0  0 00  0 00   0    0      00
    1    1  1     11  1  1  11    1    1  111  1  1  1              11
 2    22 2   2   2 2     2 2 2       2 2  2       2 2  2            2
       33   33  3  3  3  3   3    3    33  33 333  3  3    3  33  3 3
4   4                                                                    4

       6 6   6 6         6 6   66    6 6 6 6      6 6   666   6   6
 7     77      7           7         7         7    7    7   7 7 7         7
            888       8   8     8 8 8   88  8  88   8 8 888 8  88  88
       9  9  9   99 9   9   9 9       9   9 9 9   9    9  99       99
```

COPIE A:
TO:

IND. REV.

REV.

SECTION: S.P.S. -
LOC.: PREGNANA (MI)

APPR.

COMPIL. MONDUCCI

EMISS. 9 JUL 71

N.° 4T4720409GA0

Honeywell
Honeywell Information Systems Italia

DIAGNOSTIC PROGRAM - CARD LISTING

4720410S DSS 167 MARGINING TEST

CONT. SU FO. 240 FO. 239

```
CARD
NUMBER   0         1         2         3         4         5         6         7        8
         123456789 123456789 123456789 123456789 123456789 123456789 123456789 123456789 0
0079
           0  00     00     00      0      0           0     0 0   0    000    0            00
             1       11  1 11      1      1     1   11   111          1 1 111
         2     22 2 2     2   2 2      2  2 2   2 2     2 2          2 2 2 2 2
                 33   3 3  33 333 3      333 3  33  3     3          3333  33
       4   4
                                                                                            5
                 6     6 6     6      6    6   6         6   6     6
         7       77     7  7  777      7 777   7         7         7 77    7            7
                 8   88    88  8  8      8  8  8  88   8   8     88  88  8 8
                 99 9  99     9999      9 999 9 9 9    9 9 9 9    9 99 9
0080
           0  00     0                                                                      00
             1       1
         2     2
                 333
       4   4
                 6 6                                                                        6
         7       7 7                                                                      7
                 8 8
               9
         123456789 123456789 123456789 123456789 123456789 123456789 123456789 123456789 0
         0         1         2         3         4         5         6         7        8
```

COPIE A: TO:

IND. REV.

REV.

SECTION: S.P.S. -

LOC.: PREGNANA (MI)

APPR.

COMPIL. MONDUCCI

EMISS. 9 JUL 71

N.° 4T4720409GA0

4720410S DSS 167 MARGINING TEST

CONT. SU FO. 241 FO. 240

```
CARD
NUMBER   0         1         2         3         4         5         6         7         8
         12345678901234567890123456789012345678901234567890123456789012345678901234567890123456789 0
0081
         0  00  00  0 00  0 00  0 00  0  0  0 00    0  0 00  0 00  0  0    0    00
           1  1  1    11    1  1 11    1  1  1    1    1  1  1    1    1
         2    2 2     22         2                          2
              3    333    3    33    3  3  3    3  3 33    33  3  3  3  3  3
         4   4

              6   6 66  6 6    6   6      6   6    6                   6
         7    7     77    7   7 7 7 7      7   7                     7   7   77
             888 8  88 8 8 8 8  88 88  8 8 888 88  8 8 8 8 88888 88  8 88888 888
                99     9999 9     99    9  9   99   99 9  9  9   9     9999  999

0082
         0  00  0 0   00  0   0  00  0  0  0  0  00  00  0   00  0 0 00   00  000
           1  1 1 1       1     1    1    1                1      11  1    1
         2    2 2   2                2    2                     2
              3  3 33  3 3  3  33  3  3  3  3  33  33  3 3  3  3 3  3   33  3
         4   4

              66   6             6    6  6  66  6  6              6
         7    77     7         7   7 7    7   7  77  7   77        7  7    7
             8888 8 8   888 888 8 8 8  88 88 88 888 8 8 8 8 88 8888 8 8 888   8   8
             99 99 9 999 9 9   9  99   99    9   9   9 9 9 9 9 9 9  99 9 999
```

COPIE A:
TO:

IND. REV.

REV.

SECTION: S.P.S. -
LOC.: PREGNANA (MI)

APPR.

COMPIL. MONDUCCI

EMISS. 9 JUL 71

N.° 4T4720409GA0

Honeywell
Honeywell Information Systems Italia

DIAGNOSTIC PROGRAM - CARD LISTING

4720410S DSS 167 MARGINING TEST

CONT. SU FO. 242 FO. 241

```
CARD
NUMBER
         0         1         2         3         4         5         6         7         8
         123456789 123456789 123456789 123456789 123456789 123456789 123456789 123456789 0

0083

   0  00    0 0  0    0 0  0    00    00    0 0   0  0  0 00    00    00    00
     1  1    11 11    111 11     1     1    111  11  1   1     1     1
  2    2  2              2  2  2  2  2    2 2   2 2 22    2  2  2  2    2
        3 3 3  3    3 3 333 3  33 3  3  3 3    3 33  3  33 3  33    3  3
4   4

          6         6   66    66  6 6    6   6    6    66  6 66  6 6   6
 7        7             7     7    7        7   77    7    7  7        7
       8 888 8 8   8 8 888 8 888 8888  8 8 8 8 8 888 88888 8 888 88888 888
       9 9 9 9     9 9 9   9999  999 999 9 9 9 9 9   9 9   999   9999 99 9   9

0084

   0  00   00   00  0 0  0  0 0 0                                      00 0
     1    111    1 1  11  1    11
  2    2  22   2 2    2 22     2
        3 333  3 333 3   33    3
4   4

        6  6            66  6 6
 7      7        77     77   7     77
         8  8 8 88  888 8 8 8 8 8   8 8                                8
        99  99 9 999 9 9   999 9   9

12345678901234567890123456789012345678901234567890123456789012345678901234567890123456789 0
0         1         2         3         4         5         6         7         8
```

REV.

COPIE A:
TO:
IND. REV.

SECTION: S.P.S. -
LOO.: PREGNANA (MI)

APPR.

COMPIL. MONDUCCI

EMISS. 9 JUL 71

N.° 4T4720409GA0

Honeywell
Honeywell Information Systems Italia

DIAGNOSTIC PROGRAM - CARD LISTING

4720410S DSS 167 MARGINING TEST

CONT. SU FO. 243 FO. 242

```
CARD NUMBER  0         1         2         3         4         5         6         7         8
             12345678901234567890123456789012345678901234567890123456789012345678901234567890123456789 0
0085
                0  00  0   0  000          0          0 0 0 000 0            0        0   00
                  1  1   1 1    1 111111111 1111111111 1 1 1   1 111111111111 1111111 111   1
               2    2      2   2           2          2 2 2 222 2            2        2
                       33  3                3                  3  3                     3
             4   4

                         6       6            6                 6  6
             7         7           7           7   7            7 777 7 7 7
                     8           8    8            8    8               8       88 8 8 8   8
                     9   9       9      9            9    9                9       9
0086
                0  00 0                                  0 0 00    00  0  0    00  0  0  000
                  1  1 1111111111111111111111111111111111   11    11     1     1     1
               2    2                                    2         2   2       2   2     2   2
                       3                          3      3 3 33    33     3  3  3     3
             4   4

                        6          66666666666666 6666666 6 6     6   6       6   6
             7         7  7    7777    7777  7777   77777 7    77 7 77     7 7   7     7
                     8 8 8  88  88  88  8888  88 88  888888 8    88     8     8     8     8
                     99    9 9 9 9 9 9 9 9 9 9 9  9 9 999 9  9     9     9            9
             12345678901234567890123456789012345678901234567890123456789012345678901234567890123456789 0
             0         1         2         3         4         5         6         7         8
```

COPIE A:
TO:
IND. REV.

REV.

SECTION: S.P.S. -
LOC.: PREGNANA (MI)

APPR.

COMPIL. MONDUCCI

EMISS. 9 JUL 71

N.° 4T4720409GA0

Honeywell
Honeywell Information Systems Italia

DIAGNOSTIC PROGRAM - CARD LISTING

4720410S DSS 167 MARGINING TEST

CONT. SU FO. 244 FO. 243

CARD NUMBER

```
0087

  0  00    00  00  0 00  0 00  0 00    00  0  0  0    0  0 0  0  0 00  0 0 00
    1  1     1  1    1    11    1    1        1  1    11 11    1    1
 2    2    2   2   2 2   2 22  2 2   2 2   2    2   2    2   22 2 22  2 2
        3  3   3     3    333   33  3  3    3    3 333    33    33    3    3
4   4

        6   6   6 6    66        6 6   6    6      6   66  6  6  6
 7     777   7   7 7   77 77 777   7 77  77  7 77  7 7 7.  7   7 777 7 7
        8 88   8  8  8  8 88  8 88    8        8  8    8  88  8  8   88  8
           9 9   9 9      9 9 9         99  9   9   9   9 9 99    9

0088

  0  00   0  0  0   00  0 00  0 0 0  00 0 0 00  0 00  0 00  0 0 00  0 00  000
    1  1 11 1    1   1    1    11 1   11  1    1        11  1    1
 2    2  2    2 2  22 2 22  2 2 2    2   22 2 22  2 2  2 2  22 2 22  2
       33  3     33   33   3 3 33      3    3   33     33   33
4   4                                                                    4

          6   66  6  6  6    6   6    6  6 66  6    6   66  6  6  6
 7     77 7 7 7   77  7 777 7 77  7 7 7   77  7 777 7 7 777   77  7 777 7
        8  8   8  88  8 88   88  8   8  88  8 88     8  8  88  8 88   8
        9  9   9    9 99   99  9   9   9 9 99    99  9     9 99
```

COPIE A: TO:

IND. REV.

REV.

SECTION: S.P.S. -

LOC.: PREGNANA (MI)

APPR.

COMPIL. MONDUCCI

EMISS. 9 JUL 71

N.° 4T4720409GA0

Honeywell
Honeywell Information Systems Italia

DIAGNOSTIC PROGRAM - CARD LISTING

4720410S DSS 167 MARGINING TEST

CARD NUMBER

```
0         1         2         3         4         5         6         7         8
123456789 0123456789 0123456789 0123456789 0123456789 0123456789 0123456789 0123456789 0
0089
   0  00  0 0 0 00    0 0          0                                          00
     1       11  1     11        11    11
  2    2    2 2       2 2
        3 3 3 3  3      3            3
4   4
                                                                              5
        6 6           6             6
 7      77 7   77    7                7 7
        8    8  888    8             8 8                                      8
        9   99        99         9     9  9
0090
   0  00                        00 00 00 000 00 0 00 00 00 000     0  00 00    00
     1  1 1111111111111111111  1  1  1   1  1 1  1  1  1   11111 11  1  1111
  2    2  2                   22 22 22 222 22 2 22 22 22 222     2  22 22
                         33333333333 33  33 33  3 33 3333 33  333333 33333 33333
4   4
                     66            66   66  6 6  66      6  6    6       6   6   6
 7        77    7777     777    77  7777 7  7 777   '77  777     7    77   7
          88  88  88   88  8  88    8  888     888 88  8 8 8        88          8
          9  9 9 9 9 99 9 9  9999999 999  9999999 9999999 99    99 9  9999  9
```

```
123456789 0123456789 0123456789 0123456789 0123456789 0123456789 0123456789 0123456789 0
0         1         2         3         4         5         6         7         8
```

COPIE A:
TO:
IND. REV.

REV.

SECTION: S.P.S. -
LOC.: PREGNANA (MI)

APPR.

COMPIL. MONDUCCI

EMISS. 9 JUL 71

N.° 4T4720409GA0

Honeywell
Honeywell Information Systems Italia

DIAGNOSTIC PROGRAM - CARD LISTING

4720410S DSS 167 MARGINING TEST

CONT. SU FO. 246 FO. 245

CARD NUMBER

```
0123456789012345678901234567890123456789012345678901234567890123456789012345678901
0                                                                                 8

0091

  0  00  0 00  0 0 0 000  0 0  0000  0 0 0  0  0 0  0   0 0   0  0 0 0 0 0 00
    1  1  1  11 1 1 1   11 1 11    11 1 1 11 11 1 11 111 1 111 11 1 1 1 1 1
 2    2  2 22  2 2 2 222  2 2  2222  2 2 2  2  2 2  2   2 2   2  2 2 2 2 2
        33 33 3 3 33  33 3 33   33333 3 3333333333 33333 333 33 3 3 333 3
4   4

          6   6    6      6  6      6 6     6  6              6     6
 7       77     7   77  7  777  7 77      7 7 777    7    77 7 77 7   77 7     7
         88 888 8     8 8  88   8 8   8   8  8 8  8     88  8  88 8     8     8
         99   9 9999 999    999 99 99  9999 9 99 99999 9  9999    9999 9999

0092

  0  00  0  0    0 00 0 00 0.00     0  00   0.00   0 0        00  0 0 0 00 00
    1  1 111 1111 1  1 1  1 1  11111 11  111 1  111 1 11111111  11 1 1 1  1
 2    2  2  2    2 22 2 22 2 22     2  22   2 22   2 2        22  2 2 2 22
        33 333333 333333333  3333333333333 3  33333 33333333 333 3 3 33 3
4   4

         6  6     66      6                  6              6     6    6
 7       7    7  777    7   7     7 777 7 7777  7  ' 77 7 77     7 7   77  7
         8 8           8 88 8 88 8   8 8 8     88  88  8     8  8  8     8    88
         9 999   9999  99 9  999  9 9999 99 99 99 9  9999  9 99999 9999 9999

1234567890123456789012345678901234567890123456789012345678901234567890123456789012
0                                                                                 8
```

COPIE A: TO:

IND. REV.

REV.

SECTION: S.P.S. -

LOC.: PREGNANA (MI)

APPR.

COMPIL. MONDUCCI

EMISS. 9 JUL 71

N.° 4T4720409GA0

Honeywell
Honeywell Information Systems Italia

DIAGNOSTIC PROGRAM - CARD LISTING

4720410S DSS 167 MARGINING TEST

CONT. SU FO. 247 FO. 246

CARD NUMBER

```
0093

  0  00        00  0 00 0 0   0  00 00 0 0  0000 0000 0 00 00 0000 0000 0 000
    1  1  11111  11 1  1 1 111 11  1  1 1 11    1    1 1  1  1    1    1 1
 2    2  2     22  2 22 2 2   2  22 22 2 2  2222 2222 2 22 22 2222 2222 2 2
          33333 3333333333 333333333  3 3 33  333 3  3 3  3333  333 3  3 3
4   4

        66   6 6          6          6   6  66   6 66 6  6    66   6 66 6
7              77  7    7   777 7 77 777 7 77     77   7 7   77     77   7
           8      8 88 8     8 8 8 8       8888  888 8 8  88 8888  888 8 8  8
         9  9 9  9 99 9  999 9999 99999 999 99 999999   999   99 999999   9   9

0094

  0  00   0 00 0 0000 00000      0   0 00    0 0  0    0 0  0      0   0  000 0
    1  1 1 1  1 1    1    1    111  11 11     11  1    111  1     11  11  1
 2    2  22 22 2 2222 2222 2   2 2   2   2     2   2     2   2     2   2
          3333 3  333 3  3  3 3 3   33 33   3 3  33   3 3  33     3   3  3
4   4

        666    6 66   6 66            66   6 6     6 6       6 666
7          7  7  77     77   777      7  7  7         7
         8  88   8888  888888 88        8 8888    8 888     8 88          8
          99  99 99 999999   9999 9 9    9  9 9 9     9 9 9  9   99 9 9 9    9
```

COPIE A:
TO:
IND. REV.

REV.

SECTION: S.P.S. -
LOC.: PREGNANA (MI)

APPR.

COMPIL. MONDUCCI

EMISS. 9 JUL 71

N.° 4T4720409GA0

Honeywell
Honeywell Information Systems Italia

DIAGNOSTIC PROGRAM - CARD LISTING

4720410S DSS 167 MARGINING TEST

CONT. SU FO. 248 FO. 247

CARD NUMBER

```
0         1         2         3         4         5         6         7         8
12345678901234567890123456789012345678901234567890123456789012345678901234567890
0095

  0  00  0      0   0 0  0     0 0     0 0       0 0 0 0       0 0     0 000
    1  1      111  11    1  1 111     1     1 1 1           1 1     1 1   1   1
 2    2  22     2   2         2 2     2   2     2       2 2     2 2     2
          3     3   3    33     333 333333 33333 3 333 3 333 3 3 33    333
4   4

        66  66        66        6 66 6 6   6 6   6     6 6   6 6  6 66 6
 7        7.7                 77  7  7 7 7 77 77777 7  7  7 7 7 7 7 777 7 77
         888  8        8 8   88   8 88 8 8        8 88 8  8 8 8     8 8
         9    99 9 9 9       9 9   9  9 9 9 9 9 9 9 9 9 9999999999999999999  9

0096

  0  00  0 0 0 0 0       0 0             0 0 0 0 0 0 0 0 0 00   0     0    00
    1  1 1         1 1 1 1   1       1 1           1 1 1 1 1 1 111 1 11
 2    2  2 2 2   2 2   2 2   2   2 2       2 2 2 2       2 2             2    2
          3 33333   3333333 3 3333333 333 3 3 33333 3 333 3333 33  3 33
4   4

        66 6 6    66   6 6   6 6   6 6 6 6   6   6   6 6   6     6      66
 7        7777 777  7   7       7 7 7   7 7         7 7   7 7     7      7
          8 8  8             8 8 8 8   8 8     8 8     8 8  8  888 8 88  88
          9999 9 9999999999999999999999999999999999999999999       9    99   9
```

COPIE A: TO:

IND. REV.

REV.

SECTION: S.P.S. -

LOC.: PREGNANA (MI)

APPR.

COMPIL. MONDUCCI

EMISS. 9 JUL 71

N.° 4T4720409GA0

Honeywell
Honeywell Information Systems Italia

DIAGNOSTIC PROGRAM - CARD LISTING

4720410S DSS 167 MARGINING TEST

CONT. SU FO. 249 FO. 248

CARD NUMBER

```
0         1         2         3         4         5         6         7         8
12345678901234567890123456789012345678901234567890123456789012345678901234567890
0097
   0  00    00  0    0      0   0     0 0 0 0 0   0 0  0  00  00        0  0 00
     1  1       1  11  1 111 1     111  11     1  11 1 1   1  1  1 1 111 1
  2    2  22   2 2   2     2         2 2 2 2 2   2 2     2   2   2 2   2
            3 3     3  33  3 3       3 3 3     33  3  33  33  3  333   33 3    3
4   4

         6666 66  66    66  66  6     6    6 6  6   6           666       6
 7        7 7        7   7              7   7                       7    777
           8   8  888 88 8   8 8 8 8 83  888  8  8   8  88  88  88 8    88
         999  9 9 9  9   99 9       9   9    9  9 9 9        9 99  9  9       9

0098
   0  00     0    00     0   0         0         0         0         0    00
     1  1 1  1  1  1  1  1  1 11  1 11  1  1 11  1  1 11  1  1 11  1  1
  2    2  2  2  2 2        2 2      2 2      2 2      2 2      2 2
           3 33 33 3 3   3 33333 3 3    3 3 3    3 333   33 333   33 333
4   4                                                                    4

         66666 666   66    6 6   6666  6   6666  66  6 66  6   6 66  66  6 6
 7        7 77          7     7  7     7  7     7         7         7  7
          8888  8  8 88  8 8888  8 888 8   88888 8   8 888 8   88888 8   8 8
         9  9  999  9 9  999 9 99 9 99 9 99 9 99 9 99 9 99 9 99 9 99 9 99 9   9
```

COPIE A:
TO:
IND.
REV.

REV.

SECTION: S.P.S. -
LOC.: PREGNANA (MI)

APPR.

COMPIL. MONDUCCI

EMISS. 9 JUL 71

N.° 4T4720409GA0

Honeywell
Honeywell Information Systems Italia

DIAGNOSTIC PROGRAM - CARD LISTING

4720410S DSS 167 MARGINING TEST

CONT. SU FO. 250 FO. 249

```
CARD
NUMBER
0         1         2         3         4         5         6         7         8
12345678901234567890123456789012345678901234567890123456789012345678901234567890
0099

 0  00  0     0         0         0         0         0        00         00
   1  1  11  11  1 11  11  1 11  11  1 11  11  1 11  11  1 11  11  1 11
 2    2  2  2         2         2         2         2 2       2     2  2
                 3 333     3 333    33 333    33 333     3 333     3 3 3    3
4   4
                                                                          5
        666  6   6 66  66  6666  6   6666  66 6666  6   6666  66  6 66  6
7        7     7  7      7         7         7  7      7  7     77       77
         888 8   88888 8   8 888 8   88888 8   8 888 8   88888 8   8 888
        9999 9 99 9 99 9 99 9 99 9 99 9 99 9 99 9 99 9 99 9 99 9 99 9 99     9

0100

 0  00  00        0        00        0        00        00        0    00
   1  1 11  1 11  11  1 11   1  1 11   1  1 11   1  1 11  11  1 11   1  1
 2    2  2   2   2 2   2   2 2   2   2     2   2 2   2   2     2   2 2   2
         33 3 3     3 3 3    33 3 3     3 3 3     3 3 3    33 3 3    33 3 3
4   4

        6   6 66  6   6 66  66  6 66  6   6666  66  6666  6   6666  6   666   6
7        7       7 7  7    777  7   7 7       7 7       777  7    7 7  7
            88888  8  8 888  8  88888  8  8 888     88888  8  8 888 88  888
        9 99 9 99   99 9 99   99 9 99 9 99 9 99 9 99 9 99 9 99   99 9   9
```

COPIE A:
TO:
IND. REV.

REV.

SECTION: S.P.S. -
LOC.: PREGNANA (MI)

APPR.

COMPIL. MONDUCCI

EMISS. 9 JUL 71

N.° 4T4720409GA0

Honeywell
Honeywell Information Systems Italia

DIAGNOSTIC PROGRAM - CARD LISTING

4720410S DSS 167 MARGINING TEST

CONT. SU FO. 251 FO. 250

CARD NUMBER

```
0                   1                   2                   3                   4                   5                   6                   7                   8
12345678901234567890123456789012345678901234567890123456789012345678901234567890123456789012345678901234567890
0101
  0  00        00              0      0  0    0 0  0    0 0   0  0      0  0 00
    1  1  11   1  1 11   11 111   111  11    11  1    111  11  1     11  1
 2    2  2  2     2   2     2     2 2       2 2   2   2 2   2   2   2 2   2
         3     3 333   333   3   3  3  3   3  3  33  33 3   3  33  3  3  33
4   4

         6 6  6   6 66   6  6     66        66        6          6  66
 7            7 7        7     7  7      7  77     7  77        7  7      7   7
         8 88 8   8 888  88   8888      8888 8    8 88 8        888888    88
          999 9 99 9 99 9 9 9     9 9 9     999 9     9 9 9 9 9      99 9     9

0102
  0  00        0  0    0 0   0  0    0 0  0      0  0      0   0 0      0  00
    1  1 1   111  1     11  11  11   111  11    11  11   111  11    11 11
 2    2  2   2 2   2   2 2   2        2        2        2   2      2
         3  3  3  33  3  3   3  3   33 3  3   33 3  3   33 3  3   3   3
4   4

         6  66        6            6        66        66      66   6   6
 7            7        7          7  7        7        7
         888888    8 888        8 8888    8 888    8 8888      8 8   8 8   8
              9 9      99 9 9 9  9   9 9  9  9 9 9    9 9 9 9 9   9 9     9
```

COPIE A:
TO:
IND. REV.

REV.

SECTION: S.P.S. -
LOC.: PREGNANA (MI)

APPR.

COMPIL. MONDUCCI

EMISS. 9 JUL 71

N.° 4T4720409GA0

Honeywell
Honeywell Information Systems Italia

DIAGNOSTIC PROGRAM - CARD LISTING

4720410S DSS 167 MARGINING TEST

CARD NUMBER

```
0103

  0  00  00 00  0     0     0 00  00  0 00  0  0  0 00  0 00  0 0 0      0 00
    1  1         1  1     111      1  1 11     1  1  1  1  1  1  11 1    1
 2    2  22 2   2 2         2 2         2        2     2     2   2
            33  3 3           3 33 3 3  3 33 3   3  33 3   3 3  33  33     3
4   4

          6   66 66  66  6     6   6   6  6  6     666   666   6 6    6
 7          7  7                 7       7 7         7     7 7     7
          8888 8   8  88 8 8 8 888 888 88 88888  8 8 888 88888 8 88  8     8
           99 9  9 9 9       9        9     9 9   9   9   9        9   9       99

0104

  0  00  0 0 0 0     0  0 00  0 00  0 00  0 0 0 0 0  0 0     0 0     0 0 0 00
    1  1 1 1  11 1    1  1  1    1    11    11 111 111 1  1111 1  1111 1  1
 2    2  2 2   2        2            22       2 2 2 2    22 2    22 2
            3 33  33    3  3333 3 3 3 3  33 3 33   3 3   3       3       3
4   4

          6 666    6      6666  6 6   6 666 6 66  6   6   66     66      66
 7          7 7 7        7  7 7   7 7   7 77    7       7      77      77
          8 888   8     8 8  88 8 888 88888 88 88 888  8  8       8  88   8
              99   9   9   99   9            999   9 9 9   999 9   999 9   9
```

COPIE A: TO:

IND. REV.

REV.

SECTION: S.P.S. -

LOC.: PREGNANA (MI)

APPR.

COMPIL. MONDUCCI

EMISS. 9 JUL 71

N.° 4T4720409GA0

Honeywell
Honeywell Information Systems Italia

DIAGNOSTIC PROGRAM - CARD LISTING

4723410S DSS 167 MARGINING TEST

CONT. SU FO. 253 FO. 252

CARD NUMBER

```
0         1         2         3         4         5         6         7         8
123456789 0123456789 0123456789 0123456789 0123456789 0123456789 0123456789 0123456789 0

0105

  0  00       0 0     0 0  0  0 0 00  0 0 00  0 0    00 00  0 00    0 0    0 0
    1  1   1111 1  1111 1 1 111 1    11 1 11 11 1 11     1    11  1 111 1 1 1 1
 2    2  2 22 2    22 2    22 2        2        2                2  2 2 2   2
         3    3   33  3       3        3        3    3 333 3  333  333 33
4   4

        6 66   66      66      66  66  66 66   66 6 6 666  6 6   666    6
 7       7 77      77      77                      7  7           7      7
        8     8     8      8  88  8  88   8  8 88 8 8 888 8 8 88  8
        99   9   9   9   9   9   9   9   9   999  9   99    99   9   9

0106

  0  00    0  0 00  0 00  00  00  0 0   00  00  0 0 0 00  0 0 0      0    0 0
    1  1 11 1    1             1    1      1     11  1    11 1    1  1  1
 2    2  22         2    2  22   2 2 2  22  2   2 2  2  2     2  2    2
         3  3 3 3 3  33 3   3   3 3  3 3  3   3   3  3  3  3  33    33 33
4   4

        6    6666  6 66  66  666 666   6  666 6666  66  6666   6    6 666
 7       77              7  77        7  77  7'        7          7  7
        88  8 8 888 8 888 888 888 8 8 8 8 8 888 888 8 888 888   8    8 8
        9     9   9  9  99  9 9  99 9 9  99 9 99 99 9  99 99        999

123456789 0123456789 0123456789 0123456789 0123456789 0123456789 0123456789 0123456789 0
0         1         2         3         4         5         6         7         8
```

COPIE A: TO:

IND. REV.

REV.

SECTION: S.P.S. -

LOC.: PREGNANA (MI)

APPR.

COMPIL. MONDUCCI

EMISS. 9 JUL 71

N.° 4T4720409GA0

Honeywell
Honeywell Information Systems Italia

DIAGNOSTIC PROGRAM - CARD LISTING

4720410S DSS 167 MARGINING TEST

CONT. SU FO. 254 FO. 253

```
CARD NUMBER   0         1         2         3         4         5         6         7        8
              12345678901234567890123456789012345678901234567890123456789012345678901234567890
0107
                0  00  000  0 00  0 0 0   0  00  0  000 000 000 00  0 0 0      0  0    0 0 0
                  1  1   1     1     11 111 1 1     1 1 1 1 1 1 11  1  11 1        11  11  1
              2     2  2 2     2        2 2 2 2     2   2   2 2 2   2   2          2 2 22
                         3333  333 3 33   3 3  33  3   3   3   33 33   33 33     3        3    3
              4   4

                       6 66 6 666 6666  66  6  66   66 666 666 66   6666   6      66  6 6
              7         777    77    7       7 777       7     7 77    7         7  7   77
                       8888 88 88 8  88 8 8  888 8 88888 888888888 88 8  8       8 8  88
                       999  9999    999 9 9 9  9    9   9   99 99 9 9 999       9 9 9 9 9

0108
                0  00  0 0 0 0  00 00  0 00    0 0 00   0   00  00  0     0      0       0 0
                  1  1 1 1  11   1 11  1 11     11 1   1   1 1 1 1  1     1     11 1    1 1
              2     2  2 2      2 22  2 2       2 2       2     2   2 2   2 2 2
                         3  33 3  33 33     3   33 3  3   3   33  3  33  3 33  3 3 33
              4   4                                                                      4

                       666666  6  66 6 6666  6 66  6   66  6  66  66   6 6   666    6
              7             7  77 7 77  7  7 77 7      77  77 77  77  7777  7777
                       8 88 88   88888 8 888    88 8 8  88  888  88  8  8  8       8
                       9 99999     9 9 9 999   999 9    9   9 9     9    9  9 99   9   9
```

COPIE A: TO:

IND. REV.

REV.

SECTION: S.P.S. -

LOC.: PREGNANA (MI)

APPR.

COMPIL. MONDUCCI

EMISS. 9 JUL 71

N.° 4T4720409GA0

Honeywell
Honeywell Information Systems Italia

DIAGNOSTIC PROGRAM - CARD LISTING

4720410S DSS 167 MARGINING TEST


```
CARD NUMBER   0         1         2         3         4         5         6         7         8
              123456789 0123456789 0123456789 0123456789 0123456789 0123456789 0123456789 0123456789 0
0109
                0  00   0       0    00    0      00  00  00   0  00 000 00  000  0  00  00 0
                  1  1  1 1     1         11  1  1 1 1 1 1 111   1   1       1 1    1    1
              2    2  22       2  2     2   2   2     2  2   2 2           2 2 2   2
                     333       3  3333  3 3      3   33  33   3  3  33  33   33 33   3  3
          4   4
                                                                                          5
                     66  6     6 6 66  6   6   6  66  66   66  6  666 666  66 666  6   6
          7          7         7 77 77 77  77   7  77 77   77  77  7   77  7  777  7   77
                        8      8    8    8   8  888 888  8  88   88  88 88  888  8  88  8
                     9         9  9999  99   9 9  9 9       99           9   9 9     9   9
0110
                0  00    00  0 00  0 00  0 000 0 0       0      0  0 0     00  00 000 0 0 0
                  1  1 1  1    1     1     1  11 1    11 1        11 11  1 1 1 1   1  1 1
              2    2  2  2    2        2      2       2            2   2 2 2   2 2 2
                     3 33  3333  3 33    33  3 33      33     3  3 3 3    33 33   33
          4   4

                     66666 66666 6666  6 66 666   6       6     66  6   6  666 66   66     6
          7          7 777 77 77 7 77  7 7   7                7 77  77   7 777  7   7
                      8 88  8 88    88     88    8       8       88  88  888  88 88  88
                        99  9999   9          9   9   9       9  99   9 9       9   99
```

SECTION: S.P.S. -	APPR.	COMPIL. MONDUCCI	EMISS. 9 JUL 71
LOC.: PREGNANA (MI)			N.° 4T4720409GA0

COPIE A: TO:

IND. REV.

REV.

Honeywell
Honeywell Information Systems Italia

DIAGNOSTIC PROGRAM - CARD LISTING

4720410S DSS 167 MARGINING TEST

CONT. SU FO. 256 FO. 255

```
CARD NUMBER   0         1         2         3         4         5         6         7        8
              12345678901234567890123456789012345678901234567890123456789012345678901234567890123456789 0

0111
                0  00  00  00 000 00  00  00  0 0 0      0  0  0 00  0 0 0    00 000 0000 0
                  1  1  1 1 1 1 1 1   1   11  1 111 1    11 11  1     111 11  1 1 1 1 1 1 1
              2     2  22 2     2 2   2   2       2      2  2                2 2 2 2 2
                     33 33  333  3   3   3  3 3 33      33 3  3333  3 3      33  33  3
            4   4

                    66 6  666 66   66  6   6666   6       6 6666  66  66  6   66 66  6
             7      7  77  7  77   77  77  7 7          777 7  77 7   77   7  77 77      7
                     8  888  88  8  88  88  8    8       88    8    8  88  88  888  88
                     9      9 9     9   9     99   9   9   9  9999  99   9 9   9     9

0112
                0  00  0 0 0 000   0  000 0   0  0 00  0 00  0 000 0 000   000 0 000   0 0 0
                  1  1 1 111 1 1 111 1111    11    11     1     1     1  1  1  1  1  1  1 1
              2     2  2 2 2   2   2  2         2     2 2   2 2   2 2     2     2   2 2
                     3   3  33   33 3   3   3  3  3  3 33  3 33  3 33    33  3 33    3
            4   4

                    666   66  6    6 66   6   666   6 6    666 6 6 6 6 6 6 6 6 6 6 6 6
             7      7777  77  7         7  7777  77 77  7 77 77 7  77 7  77 7  77 7
                       88  88  8  8  88 8   8    8   88     88    88    88    688      8
                       99     999   9    99  9 99 99 9     9    9   99    99    9    9
```

COPIE A:
TO:

IND. REV.

REV.

SECTION: S.P.S. -
LOC.: PREGNANA (MI)

APPR.

COMPIL. MONDUCCI

EMISS. 9 JUL 71

N.° 4T4720409GA0

Honeywell
Honeywell Information Systems Italia

DIAGNOSTIC PROGRAM - CARD LISTING

4720410S DSS 167 MARGINING TEST

CONT. SU FO. 257 FO. 256

CARD NUMBER

```
0123456789012345678901234567890123456789012345678901234567890123456789012345678901234567890
0113

  0  00   0  0  0  0  00  00      0 0  00      0    0  0   0    00  0 00  00 0
    1  1  1  1 11 1   1   11  1 111     1 11  1 1 111 1 1 11  1  1     1    1
 2    2  22     2                 2         2 2       2 2  2    2   2 2   2
         3333   3  3   3   3  3   33   3       3    3  33  3    33  3 33  3
4   4

         66   6   666 6 6 66  666        66   6  66   66 66 6 6 6   6 6   6
 7       77 7     777 777 77  7 7   7   777    7777   77 77 7 7 7   777  77
            88 8  88  88  88                  8  8    8  88   8      8     8
         99 9   9 9   9   9  99 9 9 9   9 999 9 9 999 9   99  999   999   9    9

0114

  0  00    00  0   00  0 00  0 0 0  0  0 00    0 0  0    0                 00  0
    1  1 1.     1   1  1  1     11  11   111   111     111                 1 11
 2    2  2 2   2 2       2   2 2 2     2 2    2 2 2     2                 2
         3 33  3   33    33  3 3 3 33  3333   33 3  3    3                 3
4   4

         666   6   66  6 66  6666  66   666    66  66  6   6              6
 7       777 777   7   7 77  7777  77 77  7 77  7  7   7   77    7     7  7
          8     8   8     88    8  888  8888  888  88  88  8              8
         9 999 9 9 9   9 9  99 999 9  9   9 99  99 9   999 9 9999 99999 9  9
```

COPIE A: TO:

IND. REV.

REV.

SECTION: S.P.S. -

LOC.: PREGNANA (MI)

APPR.

COMPIL. MONDUCCI

EMISS. 9 JUL 71

N.° 4T4720409GA0

Honeywell
Honeywell Information Systems Italia

DIAGNOSTIC PROGRAM - CARD LISTING

4720410S DSS 167 MARGINING TEST

CARD NUMBER

```
0         1         2         3         4         5         6         7         8
12345678901234567890123456789012345678901234567890123456789012345678901234567890
0115

  0  00  0 0 0 0     0       0  0  00  00  0 00  0 0 0  0    0  0   0  0 00
    1  1  1  11  11   1 111   1 1   1   11  1  1  1  11 11   11 11      111 111
 2    2  2 2 2 2                     2   22  2  2  2   2  2    2  2      2
         33  33  3       3    3  3  33  33  3333  333 33 3    33 3   33 3
4   4

        66 6 6 6  6  66   6  6     6   666 6 666 6666   6       6      66
 7      777  77      77      77    7   7 7 7  77 7  7                777
         8 8 8 8  8       8      8   8   8    88    8  8  8    8         8
        999  99     99      99 9  99   9   9 99  9 999   9   9    9  9 9 9

0116

  0  00    00   0   0    00   0 0  0   0        0  0    0  0  0 00  0  0  0
    1  1   1        1    1     11 11       1  111 11   11  1  1 11    1    11
 2    2            22    2  2   2  2        2 2 2  2    2       2             2
         333 333  3  3333   33 33 3   3  3     33 3    3  3   333   333
4   4

        6 66  66  666 66666 6666   6      66  6    6      66  6666  6 66  6
 7      7 77  77 7777 77 77 77 7        7 77   7  '      7   7     77 7  7
        8  8888 8 8 8 8  88 8  8  8  8    8 8  8  8     8 888 888 8888888 8
          9  9      9   999   999       9   9 9 9   99  9    9   9    9
```

COPIE A: TO:

IND. REV.

REV.

SECTION: S.P.S. -

LOC.: PREGNANA (MI)

APPR.

COMPIL. MONDUCCI

EMISS. 9 JUL 71

N.° 4T4720409GA0

Honeywell
Honeywell Information Systems Italia

DIAGNOSTIC PROGRAM - CARD LISTING

4720410S DSS 167 MARGINING TEST

CARD NUMBER

```
0117

  0  00   00  0 00    00  0  00 00  0 00  0 0    00 00  0 00  0 00  00    00
    1  1 111    11  1 11  1 1 1 11  1 11  1  1  1 1 11  1 11  1 1   11  1   11
 2    2  2     2    2       2        2      2 2 2  2                2   2
          3   333  3333   3 33  3     3      3 333  3     3     3   33 33    3
4   4

        6    6666  6 66  6 6   6   6 6 6 6 66  66  6 6 6 6   6 6   6 6 6 6
 7      7 7  77    7  7  77 7  7   7 777 7 7   77  7 7 777   7 77  777 7
        8  8 88888 888 8 8 888 888 888 8 888 8 8 8 888 8 888 888 8 8 8 88
         99 9   9 9   9    99 9     9  9  9  9       9  9 9   9 9   9   99

0118

  0  00  0 0  0   0  0  00 00  0 00  0 0   000 00  0 00  0 00  00  0 0 0  00
    1  1  11 11   1    1 1  1     1    11    1  1     1         1     11 11 11
 2    2    2  2         2       2      2 2 2  2                2    2 2  2
          33 3   3   3 33  3     3      3 333  3     3     3   33  3  33 3
4   4                                                                     4

        6    6      6666  6   6 666 6 6   66  6 6 666   6 66  666 666    6
 7      7           7     77  777 7 7777  7  777 7 77  777   7 7 77
        88  8     8 8 8 8 888 888 8 888 8 8 8 888 8 888 888 8 8 8 88    8
          9          9  9     9  9  9  9       9  9 9   9 9   9   99 9

1234567890123456789012345678901234567890123456789012345678901234567890123456789012345678901234567890
```

0	1	2	4	6	8
		MONDUCCI	9 JUL 71	414/20409GAD	

COPIE A:
TO:
IND. REV.
REV.

SECTION: S.P.S. -
LOC.: PREGNANA (MI)

APPR. | COMPIL. | EMISS. | N.°

Honeywell
Honeywell Information Systems Italia

DIAGNOSTIC PROGRAM - CARD LISTING

4720410S DSS 167 MARGINING TEST

CONT. SU FO. 260 FO. 259

CARD NUMBER

```
0                   1                   2                   3                   4                   5                   6                   7                   8
12345678901234567890123456789012345678901234567890123456789012345678901234567890123456789012345678901234567890
0119

  0  00  0   0  0  00 0 000 0 00  0 00  0 0    0  0 0 000 00   0    00  0 00
    1  1 1   1    111    11    1     1  1  1      111 1 1 1    1    11       11
 2    2         2 2 2 2 2 2 2 2 2 2 22        2       2 2 2              2 2
            3  33 33 3 333 3 333 3 333  33   33    3 333  3   3     3  3 3
4   4
                                                                                5
        6      66  6 6 6 6 6 6 6 6 66 6666  6  66   6   6   66  666   6 6
 7      7    7    77 7  77 7  77 7 7 7  7  777 77  77  77  7   7 77 77 77
        88   8   8 88    88    888   8 88 88 8   8 8 8 8 8 8 8 8 8 8 8    8
         9      99   9   99    9      9999 9 99  9      9  99  9    99 9

0120

  0  00    0    00      0    0  0   0   00  0 00  0 0 0  0   0    00  0 0 0
    1  1  11     1  1  1 1  11   1  1    1    1    11    11  1 11     1 11
 2    2   2        2          2   2   2  2 2  2 2 2                2 2
            333  3      3   3 333  3   33  3 33  3 3 3  3   3    3  3 3
4   4

        6      666  66 666  66 6666 666  6 6  6 6   6  66  666   6 6     6
 7      77  7  777  77777  77 77 7 7 7  777  77 7  77  7  7 77 77 77
        8   8   8 8 88  8 8 888 8 8 8  8    8   8 8 8 8 8 8 8 8 8   8
        9 9 9  9 999  9 999 9  99 999  999  9 999 9  99 9   99 9 9

123456789012345678901234567890123456789012345678901234567890123456789012345678901234567890
0                   1                   2                   3                   4                   5                   6                   7                   8
```

COPIE A: TO:

IND. REV.

REV.

SECTION: S.P.S. -

LOC.: PREGNANA (MI)

APPR.

COMPIL. MONDUCCI

EMISS. 9 JUL 71

N.° 4T4720409GA0

Honeywell
Honeywell Information Systems Italia

DIAGNOSTIC PROGRAM - CARD LISTING

4720410S DSS 167 MARGINING TEST

CONT. SU FO. 261 FO. 260

```
CARD      0         1         2         3         4         5         6         7        8
NUMBER    123456789012345678901234567890123456789012345678901234567890123456789012345678900

0121
            0 00  0 0  00     0   0 0  0   00  0 00  0 0 0  00 0 0   0  00 0  0
             1  1 11    1 11  1 1 111 1 1 11  1  1    1    11 1 1 111 111 1 1  1  11
           2   2  2        2 2        2  2    2   2 2  2 2 2           2 2 2 2 2
                  33  3     33    3 333  3    33  3 33 3 3 3  3    3   3 33
          4  4

                6     666  6  666  66 6666 666   6 6  6 6  6   6   66  6  6 6
          7     77 7  777   77777  77 77 7 7 7   777  77 7  777777  77   777         7
                8       8 8 8  8 8 888 8 8 8   8     8    8 8  8 8 888  8 8888
                99 9  9 999 9 9 999 9   99  999   999   9 999 9 99  9   9 9 99 99

0122
            0 00  0  0  0 00    000   .000 0 000  00  0 00  0 00  00  0 0 0 0 0  0  0
             1  1   111   111    1  1  1  1  1  1  1   1  1     1   11  1  1   11
           2   2  2   2 2     2     2    2   2 2  2 2    2   2  2 2 2   2
                   3  3333    33    33  3 33   33   33 3  333 333 3 3  333  3 3 3
          4  4

                6 6   666      6 6 6 6 6 6 6 6 6 6  6666  666   6  6666  6 6    6
          7     77 7 77  7 77 7  77 7  77 7  77 7  7  7  7    7 77   7 77   7
                88 888  8888    88    88    888   8 88888 8 8 8 888  88   88  88    8
                9 9  9   9 99   99    99    9     99 9  99 9  9  9  9 9  9  9 9

          123456789012345678901234567890123456789012345678901234567890123456789012345678900
          0         1         2         3         4         5         6         7        8
```

SECTION: S.P.S. - / LOC.: PREGNANA (MI)	APPR.	COMPIL. MONDUCCI	EMISS. 9 JUL 71	N.° 4T4720409GA0

COPIE A: / TO: — IND. REV. — REV.

Honeywell
Honeywell Information Systems Italia

DIAGNOSTIC PROGRAM - CARD LISTING

4720410S DSS 167 MARGINING TEST

CONT. SU FO. 262 FO. 261

```
CARD NUMBER   0         1         2         3         4         5         6         7         8
              123456789 0123456789 0123456789 0123456789 0123456789 0123456789 0123456789 0123456789 0
0123
              0  00  00 0 0 0 0            0   0  0 00  0 00  0 00    00  00  00    00 0
                1  1 1   11   1                 1  1  1  1 11  1 11          11        11
            2    2   2 2 2         2 2 2 2       2     2 222 2 2         2          2
                   3  333 333333 3 3 333 3 3 33333 3 333 33333 3 333 3 3 3 3 3   3
            4   4

                  6 666  6 66 6 6   6 6   66   6 66  666 6 6 6   6666  66  6      66
            7     777 7  7 77   7 7   7          7   7  7       7 7           7  7
                  88 8    88  8 8 8 8 8 8888888   88 8  88    8 8   8 8 8  88  8888
                  99 9 9   9  9 9 9 9 9 9 9 9  999   9 99  9 9  9 99   9   9    9        9
0124
              0  00     0    00   0  0 00   0   0  00  00  00  00  000 0 0 0 000   0 0 0  0
                1  1    1         1  1                 1   1   1   11    111 11  1  11  1
            2    2          2                      2   2   2   2   2   2 2   2           2
                  3 333 33  3 333 3 333 3 3 3 3 333 3 3 333 3 3 333  3 3 33 3      33
            4   4

                 66      66 6   6 666 6 6 6 6 666 666 6 6 666 66 6 6 6   6 6 6 6
            7            7   7    77  77   7  77   7  77  7   777 7    7777 7
                 8 8   888 8 8  8 88 888 8 8   8   8   8   8  8 8  8 8  8 8  8 8
                  9   9 9   99 9 99          9   9   9   9   9 99    9   999 9 9

              123456789 0123456789 0123456789 0123456789 0123456789 0123456789 0123456789 0123456789 0
              0         1         2         3         4         5         6         7         8
```

COPIE AI TO:

IND. REV.

REV.

SECTION: S.P.S. -

LOC.: PREGNANA (MI)

APPR.

COMPIL. MONDUCCI

EMISS. 9 JUL 71

N.° 4T4720409GA0

Honeywell
Honeywell Information Systems Italia

DIAGNOSTIC PROGRAM - CARD LISTING

4720410S DSS 167 MARGININO TEST

CONT. SU FO. 263 FO. 262

```
CARD NUMBER   0         1         2         3         4         5         6         7         8
              123456789 0123456789 0123456789 0123456789 0123456789 0123456789 0123456789 0123456789 0
0125
                0  00   000 0   0 000   0 0 0  00 0 000 0 000    00 0 0 0  0  0 00  0 0  0
                  1  1 111  1  11 11  1  11 1 11  1 11     1     1     1  1         11   1 1
               2    2  2        2  2 2  2     2 2                 2 2   2  2     2       2
                      3  3  3 3 33 3     33  3  3 33     3  3 33     3 333 3 333 3  33
             4   4

                     66 6 666   6 6 666   6   6 6 6 6 6 6 66666 66666   6 6666  66
              7       7777      7777      7  777 7 777 7 77    77       77    777     7
                      8 8    8  8 88   8  88 888 8 888 8 88    88    8  8 8  8  8 8
                     9 999   9   99   9     99    999 9 99    99    9     9 999 9 9

0126
                0  00  00  0 00    000   0 00      00   0  00   0  0 0 00    00    0 00  0
                  1  1  1  1  1         11 1    1         1       111 11         11 1    1
               2    2  2  2 22    2 2     2     2 2       2       2 2 22    2       2     22
                      3 3 333 3 3 3 3 3  3 33 3  333 3 3 333 3 3 33 3 3333 3 333     3 3
             4   4

                     66 6 6 6 666   66  66  66   6  66  6   66  6   666 6 6  66   6   6
              7       7    77  7 77  7  7 7  7      7      7     7 7     77    7 7
                     88  8  8 88    888 8   8 8  88 8 8  88 8888 88 8 8 88    888 8   8
                        9999    999   9 9 99 99    9 9 99       999 9    99999 99 9 999

              123456789 0123456789 0123456789 0123456789 0123456789 0123456789 0123456789 0123456789 0
              0         1         2         3         4         5         6         7         8
```

COPIE A:
TO:
IND. REV.
REV.

SECTION: S.P.S. -
LOC.: PREGNANA (MI)

APPR.
COMPIL. MONDUCCI
EMISS. 9 JUL 71
N.° 4T4720409GA0

Honeywell
Honeywell Information Systems Italia

DIAGNOSTIC PROGRAM - CARD LISTING

4720410S DSS 167 MARGINING TEST

CONT. SU FO. 264 FO. 263

CARD NUMBER

```
0123456789012345678901234567890123456789012345678901234567890123456789012345678901234567890
0127

  0  00  00   00  00  0 00  0 0 0 00  0 0 0   0 0  0    00   0   0      0  0
    1  1 1 1  1    1     1  1  11  1     11 1  1   1      1   1  1     11   1
 2    2   2 2 2   2   2 2     2 2 2   2 2 2 2         2     2   2   2 2 2    2
        3 3  3 3 333  3333   3  3 33 3 3  3    3 333  33 3  33  33  333 333   3
4   4

         6       6   666   6666  6   6666  6         666   6   66  6    6
 7         7   7   7  7     7  7  77  77     7     7    77   7   7  7
         888   8 888 888 8 8 888 888   888  88 8   8888 88 888 88  88 8
         9 9    99  99 9  99 9 9 9  9  9 9 9   9        9       9     99 9

0128

  0  00    0 0 0 0 0     0 00   0  00  0 00     0  00  0    0  00  0 00  0 0
    1  1  11  11  1    111 1     1  1  1  1    1   1    1      11  1      1 1
 2    2   2   2 2       2 2       2         2 2   2   2              2   2   2
        3  33  3  3 33   33 3 333 333 3 333 333 3 3 3 3  33 3 3 3 3 3 3 3
4   4                                                                      4

         6  6              6 6   66  6 66  666   6 6 66   66 6   6 666 66
 7       7           7     77     7  7 7  7 77  777      77 77  7 777
                888   8 8   8 8 8 8 8888888    88 888  88 888 888888888  88
        9 9   9   9     9      9  99 99999 99 9  999  9 9     99 99999  9 9

123456789012345678901234567890123456789012345678901234567890123456789012345678901234567890
```

COPIE A:
TO:

IND. REV.

MONDUCCI 9 JUL 71 4T4720409GA0

REV.

SECTION: S.P.S. -
LOC.: PREGNANA (MI)

APPR. COMPIL. EMISS. N.°

Honeywell
Honeywell Information Systems Italia

DIAGNOSTIC PROGRAM - CARD LISTING

4720410S DSS 167 MARGINING TEST

CONT. SU FO. 265 FO. 264

CARD NUMBER

```
0129

  0. 00      0 00  00  0 00  0     0  0   0  00  0 0 0  0   0  0       0  0
    1  1 1     1 1  1  1      1   11       1  1  1  11         1    11    1
 2    2              2    2  2 2  2 2       2       2 2       2             2
        3 33 3 3 3 333 3 3 3 3   3  3333 333 333 3 33 3333 333 3  33   3 33
4   4
                                                                          5
         6  66 6   66  6 6 6 66   6  666 6   66  6 66  666 6 6 66   6     6
7        7  77 77  7   7 7 7      7  777     7   7 7   777   7     7     7
           888 888 8 8888888  88 88    8 8 8 8 888888    8 8 8  88 888 8  8
        99     99 999 99999  9 9   9 9    9  99 999999 9    9  9 9     9 9

0130

  0  00  00   0  00  00  0 00  0    0  00  0 00  0    0  00  0 00  0    0  0
    1  1        1 1  1  1      1      11  1      1      11  1      1      1
 2    2        2  2        2            2  2                2        2    2
        3 3 333 3 3 333 3 333 3  33 3 3 3 3 3 3 3  33 3 333 3 333 3  33 3 3
4   4

         66 6   6   66  6 666 66   66 66  6 6 6 66   66 6   6 666 66   66 6   6
7        77     77  7   7 7 7      77 77  7 777     77 7   7 777     77 7
         88 8 88888 8 8888888  88 888 8 8888888  88 888 888888888  88 888 8
        9    9  99  99 99999  9 9    99 99999  9 9    99 99999  9 9    9
```

COPIE A: TO:

IND. REV.

REV.

SECTION: S.P.S. -

LOC.: PREGNANA (MI)

APPR.

COMPIL. MONDUCCI

EMISS. 9 JUL 71

N.° 4T4720409GA0

Honeywell
Honeywell Information Systems Italia

DIAGNOSTIC PROGRAM - CARD LISTING

4720410S DSS 167 MARGINING TEST

CARD NUMBER

```
0131

  0  00  000  00  0 00  0     0  0   0  0 00  0 0  0   0  0       0 0 0   00
    1  1 11 1  1  1      1   11      1  1   1  11          1   11   11 1   1
 2    2       2     2  2 2   2 2              2 2 2       2           2 2    2
        3 33 333 3 3 3 3   3  3333 333 3 333 33 3333 333 3  33   3 3  3
4   4

         66  66  6 666 66   6  666 6   6 66  66  666 6 6 66   6     6  6
 7       7   7   7 7 7      7  777     7 7   7   777   7      7     7  7      7
         8 8 8 8888888  88 88    8 8 8888888 8     8 8 8  88 888 8  88  88
        999 999 99999  9 9   9 9    9 99999  999 9    9  9 9     9 9 9 9

0132

  0  00    0   0  0    0 0  0    0 0   0 0 0 0 0   0  0  0     0 00    00  0
    1  1  11  1   1    111  1     11  11  11  1   11 1   11   11  1    11   1
 2    2    2 2   2    2 2       2 2   2   2 2   2 2 2   2 2   2       2     2
        33 3333 3333  3  3  33  33 3   3   3  3 33 3  3 3   33 33 3 3  33 3
4   4

            66   6 6 666       66        6       6  6   6    6   6   6 6
 7          77   7   77        77                 7   77 77   7   7  7  7
        8     8 8 888 8     888 88         888 8 8   8  888  88  88  8 88 8   8
          9 9 9    9  999 9  9  999 9 9 9 9   9   9 9 99999 9 9 9  9     9
```

0	1	2	3	4	5	6	7	8
123456789	0123456789	0123456789	0123456789	0123456789	0123456789	0123456789	0123456789	0

COPIE A:
TO:
IND. REV.
REV.

SECTION: S.P.S. -
LOC.: PREGNANA (MI)

APPR.
COMPIL. MONDUCCI
EMISS. 9 JUL 71
N.° 4T4720409GA0

Honeywell
Honeywell Information Systems Italia

DIAGNOSTIC PROGRAM - CARD LISTING

4720410S DSS 167 MARGINING TEST

CARD NUMBER

```
0133

  0  00     00    00     0     0     00  0     0  0 00  0 0 00  0    0  0  0
    1  1 11 11     1  1 11  1  1  1 1 1 11  1 11    1    11 1    1  1  1 1 1
 2    2  2 22    2  2 2 2  2  2 2 2 2 2  2 2         2 2 2  2        2  2
       33  3333 3 3 33333 33  3 333333333 33333 3 333 33 3333 3  33 3 3 33
4   4

           66  66   6666  66   66 6  66  6666  6 6 6 6    66 66   6  6666
 7        7 77 7      7 7      7  7 7 7     7     7 77  7  7 7     77     7
       8   88  8 88 888 8888  8 88888888888888 88  8  8  8 8  88   8  88
        9      99        9    999 9  999   9     99   9 9    9 9    999     9

0134

  0  00  00  00  0 00  0 0 00  00  0   0 0 0   0   0  0      0   0   0 00  0  0
    1  1     11  1 1   111 1   1    1  1  11  11  11 11     11  11  11 11   1
 2    2       22         2 2       2 2    2  2 2 2       2 2 2 2 2 2 2
       333 3 3 3 3 3 3  3333 3 3 3   3    33  33  3333  33  33  33  3333 3  3
4   4

           666 66666 6    66 666 66   6    6    6  6    66  6    6  6  6
 7        7  7  7 77  7  7 7  77  7   7        77   7 7 7    7  77  7 7
       888  888    8     8 8   8   8 8 8    88  8    888888    8  8  8   8
          9   9 9   9 9     99  9 9    9   9   9 9  9   99   9   9   9
```

COPIE A: TO:

IND. REV.

REV.

SECTION: S.P.S. -

LOC.: PREGNANA (MI)

APPR.

COMPIL. MONDUCCI

EMISS. 9 JUL 71

N.° 4T4720409GA0

Honeywell
Honeywell Information Systems Italia

DIAGNOSTIC PROGRAM - CARD LISTING

47204105 DSS 167 MARGINING TEST

CONT. SU FO. 268 FO. 267

CARD NUMBER

```
0         1         2         3         4         5         6         7         8
123456789 0123456789 0123456789 0123456789 0123456789 0123456789 0123456789 0123456789 0

0135

  0  00  0  0 0 0   0   0  0    0 0   0 0 0 0   0   0  0    00    0 0 0 0  0
    1  1 11 111 1 111  11  1  1  11  11    11  11  11 11    11    111 1 1   1 1
 2    2  2    2   2   2 2  2    2  2    2   2 2 2       2   2 2 2 2   2
       33333 333   33  33 3 333  33  333   33  33  3333   3333 33  3 333 3  3
4   4

         66         6    6  666    6        6    6  6  6 66    6    66  6
 7        7 7             77  7    7   7        7   7 7 7 7   7       7
       88   8 888    88 8   8 8 8 8 8 8 8    88 8    8 8 8 888 8   88  88
        9 9 9    9   9 9 9   99 9 9 9   9   9 9 9 9    9  9 99 9 9 9

0136

  0  00    0 0 0 0   00    0   0  0    0    0  0   0    00  0 00  0 0   000
    1  1    11 1 1 1   1 111  11  1  1 1   111 1   11  1  1    1    11     1
 2    2      2 2    2    2 2 2 2   2 2   2   2   2   2       2             2
       3333 3 333  3 33   33  33 3 33333 33 33 3 333 333 3 3 3 3 3 33 33 3  3
4   4

         66   66   6      6    6  6666  66    66  666   6 6 6 6 6    6
 7       7 7    7 7    7   7   77  7 7              7       7    7
       8  8  88  88  8 88    8 8   8 888 888 888 888 8 8 8 888 8 88  8 888
       9 999 9 99  9    9   9 9 9       99 9  9       9    99   9 9 9
```

0	1	2	3	4	5	6	7	8

COPIE A:
TO:
IND. REV.
REV.

SECTION: S.P.S. -
LOC.: PREGNANA (MI)

APPR.
COMPIL. MONDUCCI
EMISS. 9 JUL 71
N.° 4T4720409GA0

Honeywell
Honeywell Information Systems Italia

DIAGNOSTIC PROGRAM - CARD LISTING

4720410S DSS 167 MARGINING TEST

CONT. SU FO. 269 FO. 268

CARD NUMBER

```
0137

  0  00 .   0    0 0  0   0  0  0     0  0 0   00   0    0 0  0    0 0  0 0
    1  1 1  11  1  11 1   11    11  1 11    11     11  1  11 11  1  11 1   1
 2    2    22  2   2 2   2    2  2 22            22  2   2 2   2   2 2
        33 333 333  3333 333 3 333 33333 3 33 33 3 333 333  3333 333  3333   33
4   4

           666 666      66  6 66  66666 6 6    6  666 666      666      6
 7        7   7        7         7   7 77    7       7        7         777
        8  888 88888 888 888 88888 8 888 88  8 888 888 88888 888 88888 88 8
        99   9  9  9    9              9   9 9 9     9  9  9      9  9   99

0138

  0  00  0   0  0  0 00  0   00  0 00  0 00  0 0 00  0 0 0 00    00  0 00  0
    1  1   111  1  1    11  11  1  1  1    111 11    111 11  1 11  1  1   1
 2    2   2 2      2    2      22   2              2    2  2    2
        3333  3 3 333 3 33  3 3 333 3 333 3 33 33 3 3 33 33 3 3333333 33333  3
4   4                                                                      4

          66     6 6   6    6  6 6 6 6 6   6    6  666    6  6 6 6  6666
 7        7   777     7     77  7 77  7 7       7   7   7 77    77
        88888      8    88 88    88   8 8 88 8 8 88  8 888 88  8 88 88 8
        9   9    99999 999 9   9999  99999 999 9   99999 9   9 99  9999  9
```

COPIE A: TO:

IND. REV.

REV.

SECTION: S.P.S. -

LOC.: PREGNANA (MI)

APPR.

COMPIL. MONDUCCI

EMISS. 9 JUL 71

N.° 4T4720409GA0

Honeywell
Honeywell Information Systems Italia

DIAGNOSTIC PROGRAM - CARD LISTING

4720410S DSS 167 MARGINING TEST


```
CARD NUMBER   0         1         2         3         4         5         6         7         8
              12345678901234567890123456789012345678901234567890123456789012345678901234567890123456789 0
0139
                0  00  00 00    0 00   0    000   0 0 0 00  0 00  0 000   0   00       0  0
                  1  1 11   1 111 1 1 11  1   1 111  11  1  1  1  1   1  11   1    111 1 1
               2    2         2   2 2 22  2 2   2              2     2 2   2       2 2 2
                     33 333 33 33 33333 333 3333  3   3 3 3 3 3 3 3 333  3    3 333  33   3
          4   4
                                                                                          5
                        66 666     6666 666   66   6   6   66     6   66        6 6   6
           7         7  77  7   7   77  7  7  7   7   7     7     7            7777  7
                     88  8  8 8 888 8 8 8  8  8 8 8 8 8 8 888 8 8 888   8   8 8  8 8   8
                     999999  99 9    9   9999  99   9    99 9  99 9    99      99 9 9 9
0140
                0  00    0   0   0  0      0   0  0   0     0      0  0  0 00  0 00     00
                  1  1  11  11  11 11     11  11 1   11  1 11  1 111 11  1 11    11  1 1  1
               2    2    2   2 2 2      2 2 2 2    2   2 2  2 2 2 2  2 2        2 2
                     33 33  33  3333  333 33  33 3 333 33333 3333 3333 33 33 3 333 33333  3
          4   4

                      6  6    6  6    6   6      66  6666  6666        6  6 6   66666   6
           7         7       77   7 7 7    7  77        7   7 7   7  7  7   7 77     7
                        88  8    888888      88 888 88888 8 888 888  8 88 88  8 88888
                      9   9   9 9  9   99   9    9    9        9    9      99 99 9 9
```

SECTION: S.P.S. -	APPR.	COMPIL. MONDUCCI	EMISS. 9 JUL 71
LOC.: PREGNANA (MI)			N.° 4T4720409GA0

COPIE A: TO:

IND. REV.

REV.

Honeywell
Honeywell Information Systems Italia

DIAGNOSTIC PROGRAM - CARD LISTING

4720410S DSS 167 MARGINING TEST

CONT. SU FO. 271 FO. 270

CARD NUMBER

```
0                 1                 2                 3                 4                 5                 6                 7                 8
123456789012345678901234567890123456789012345678901234567890123456789012345678901234567890123456789012345678901234567890
0141

  0  00      0    0  0  0   0 00      0   0   0 00      0  0  0 0  0  00  00
    1  1 1       11      1     1    111 111 111 11     11 1   111     1     1
 2    2           2 2   2 2       2 2 2   2   2 2    2 2       2 2       2
        33 3 3 33 33 3 3   3   3 333  33  33  3333  333 3333 33 33 3 3 3 3   3
4   4

         6 666 6     6 66   6    6 6   6   6        6   666 6     6 666 66
7       7   77     7 7     7     7777  7       77 7 7     77  7  7 7  77  7   7
           888 8   8 8  88  88 8  8 8   8   8    8888888  88  8  8 8   8
         9  9   99 9   9 9      99 9 9 9 9   9   9   99     9 9 9   99  9

0142

  0  00  0   0 00   0   0 00      0   0  0  0   0 0 0   0 00    00    0 0 0
    1  1  1        11 111 11    11 111    11  1  11 111 11    11    111  1
 2    2   2 2      2  2 2    2 2   2 2    2 2   2  2 2    2       2
        33  33  3 3  33  3333  33  333 33 3 33  3   33  3333   333  333 3   3
4   4

         6     6 66  6        66  66     6        6     6 66   66
7       7   77  7  7     77 7 7    7  7 7  7  77       77   7 7    7
         88  88 8 88   8   8888888  8  8    8  88   8   888 8 88688   8   8
         9       99   9   9   99   9 9 9 9 9    9   9   9  9  9 99 9 9
```

COPIE A:
TO:
IND. REV.

REV.

SECTION: S.P.S. -
LOC.: PREGNANA (MI)

APPR.

COMPIL. MONDUCCI

EMISS. 9 JUL 71

N.° 4T4720409GA0

Honeywell
Honeywell Information Systems Italia

DIAGNOSTIC PROGRAM - CARD LISTING

4720410S DSS 167 MARGININO TEST

CONT. SU FO. 272 FO. 271

CARD NUMBER

```
0                   1                   2                   3                   4                   5                   6                   7                   8
123456789012345678901234567890123456789012345678901234567890123456789012345678901234567890123456789012345678901234567890
0143
   0  00  00 0   0 0     0  00   0  0    00      0 0 0   0 0   0  0    00   0
     1  1 11 1    11 1 111 1 1 111  1    11     11 1      11  11  1  1 11  1 1
  2    2  2   2   2     2   2  2       2     2 2 2   2  2  2       22
         33333  33 333   33 333  3  3 33 333  3  3 33   33 3   3  3 33 33333  3
4   4
         666   66  66    6   66        6 6 666   66  666          6 66  6
 7       7   7   7  7                7  7 7 77     7   7          7  77 7
         88  8  88  88    88   8  8    88 8     888888 8    8   8  8 88  8
         9 9   999     9      99    99    9    9 9  9  999 9 9    99     99   9
0144
   0  00    00    00  0   0  0  0 00  0 00  0 0  0  0 0  0  0       0   0   0  0
     1  1    1    11  1  11 11  1 11  1 1   111 1   111 1    1  1 11   11    1
  2    2    2  2 2   2   2 2   2 222 2 2   2 2     2 2     2         2 2
         333 3 3  33 33   33 3 3 333 33333 3  33 3 33 33 3 33 333  3 33 3
4   4                                                                      4
         66    6 6  6      6  666 6 6 6 6 66    6 6     6 6    6     6
 7       77    7  7        7    7  7     7     7 7 7  7 7     77    7
             8    88  8    8888 8  88    8     8 8     8 8  88   8 8  88   8
         9 9  99    99   9     9 99  9 9   9 9 9   9 9 9   9 9 9   9 9 9
```

COPIE A: TO:

IND. REV.

REV.

SECTION: S.P.S. -

LOC.: PREGNANA (MI)

APPR.

COMPIL. MONDUCCI

EMISS. 9 JUL 71

N.° 4T4720409GA0

Honeywell
Honeywell Information Systems Italia

DIAGNOSTIC PROGRAM - CARD LISTING

4720410S DSS 167 MARGINING TEST

CONT. SU FO. 273 FO. 272

CARD NUMBER

```
0145

  0  00   0 0   0  0      0   0 0 0 0 0   0  0    00    00  0 00  0   0  0 0
    1  1 1 1   11  1     11  11  11  1   11 11  1 11  1  1    11  1  11 11  1 1
 2    2       2 2       2 2   2   2 2   2 2 2     22    2     2   2  2 2
        33 3 33 3333  333 3   3   3  3 33 3  3 33 333333 3 33 33 33   33 3
4   4                                                                        4

         6    6  6     66       6       6  6    6 66  66      6  6      6
7       77   7      7 7                 7    7  7  77 7     77 7        7
           8  8    888888          888  88  88  8 88  8  8  8 88  8    8888
        99 9 9 9 9  9   99 9 9 9 9   9 9 9 9  99     999  99    99   9

0146

  0  00  0 0 00  0 00  0 0  0  0 0  0  0   00   0  0   00   0    0     0 0 0
    1  1   1 11  1 1   111 1   111 1    1  1   1    1  1   11  1  1     1   1
 2    2    2 222 2 2   2 2 2   2 2 2   2 2     2   2 2     2   2   2         2
        333 333 33333 3  3333 33 3333 33  3 3 333 33  333 333 3333  33  3 3
4   4                                                                        4

         6666 6 6 6 6 66    6 66    6 6       6 6 6       66  6 66   6
7       77 7  7     7     7 7     7 7  7  77   77     7     7  7    77    7
         8 8  88    8     8 8  8  8 8   8   8 888  88   8 8   88 88 888 8 8
        9 9 99  9 9   9 9 9   9 9 9   9 9 9  9 9  9 9 9  9   99 99 9     9
```

COPIE A: TO:

IND. REV.

REV.

SECTION: S.P.S. -

LOC.: PREGNANA (MI)

APPR.

COMPIL. MONDUCCI

EMISS. 9 JUL 71

N.° 4T4720409GA0

Honeywell
Honeywell Information Systems Italia

DIAGNOSTIC PROGRAM - CARD LISTING

4720410S DSS 167 MARGINING TEST

CONT. SU FO. 274 FO. 273

```
CARD NUMBER   0         1         2         3         4         5         6         7         8
              12345678901234567890123456789012345678901234567890123456789012345678901234567890123456789 0

0147
                0  00  0  0  0    0 00      0  0    0  0      0   0 0 0 00      0 0 0  000
                  1  1 1 11     111 11    111     111  1     11  11  11  1  1 11   11 11  1
              2    2     2     2   2       2     2         2 2   2   2 2   2 2   2 2 2
                     333 3333 33 3333  33  3  3 33 33 3  333 3   3   3  3 33333 3  3  3    3
              4   4                                                                          4

                     6   6   6         6       66   6    66       6      6 6    6  6  6
              7     77     7  7  77 7 7      7     7  7 7                7  7 7  7    777
                     8       888  8888888      8 8 8 888888          888 88888   8  8 8
                    99 9 9 99 99 9  9   99 9 99  9    9   99 9 9 9 9   99 9 99 9 9 9 99

0148
                0  00    0 0 0  00   0 0  00 0   0  00   0 0     0 0 0   0 0 0 0   0 0 0 0
                  1  1     111 11  1  11 11  1  11 11  1  11 1 11   11 1  1   11  11  11  1
              2    2  2 2 2                          2 2         2 2       2 2   2   2
                    3  3 3 3333      3333  3 3 3333      333  3 3  333  3 3  333 33  3
              4   4                                                                          44

                       6 6     6 6 6     6 666     6 666         6   6     6  6   6
              7     7 7 7   7 777 7   7 777     7 777     7     7   7     7
                     8   8 8 8  8  8 8 8  8    8 8  88   8 8 8 8   8   8 8                8
                           9   999 9 9   999   9   99    9     9 9 9 9   9 9 9 9 9   9
              12345678901234567890123456789012345678901234567890123456789012345678901234567890123456789 0
              0         1         2         3         4         5         6         7         8
```

COPIE A:
TO:
IND. REV.
REV.

SECTION: S.P.S. -
LOC.: PREGNANA (MI)

APPR.
COMPIL. MONDUCCI
EMISS. 9 JUL 71
N.° 4T4720409GA0

Honeywell
Honeywell Information Systems Italia

DIAGNOSTIC PROGRAM - CARD LISTING

4720410S DSS 167 MARGINING TEST

CONT. SU FO. 275 FO. 274

CARD NUMBER

```
0149

  0  00   0 0 0 0  0  0 00  00    00    00    00    0  0 0 0 00  0  0  0 00
    1  1 1 1   11 11    1   11  1 11  1  1  1  1  1 11    111  1    11    1 1
 2    2  22   2 2 2   2 2   2   2 2   2 22  2 2   2 2   2 2   2     2   2 2
       3  3 3  3  3 3  33 333 33333 333 3 333 3333333 3  3 33 333 333 3  3
4   4                                                                      4
                                                                          5
             6  6    6 6  6   6 6   6 6 6 6 6 6 6 6   6  6   66 666   6  6
 7       7    7    7  77 7          7    77      7 7  7    7  77 7    7    7
       8 88   8  88 8  88   8 88 8  88 88 88 8  8888  8  88 88  8888  88 8
        9 9 9 9 9  9      99  9 99  9 99  9 999 9 9 999   9   9 999 999

0150

  0  00  0   00  0 0  0        0     0     0      0 0 0   0 0 0 0   00    0
    1  1  1      111  1  1 11  11  1 11    11    111 1 1    11 1 1     1  1 1
 2    2  2 2 2   2 2    2 2 2     2 2             2 2 2     2 2 2 2 2   2
       3   3 3 33 3  3 3333  333 333333  3 3  33  3 333 333 3 333  3 33
4   4                                                                      4

             6  6       6 6    6  6 6  6 66     66   66  666   66  66    6    6
 7       7   7        7       7        7 777       7 7
       888 8888  8     88888   8 88888 8  88 8888  88 888 8  88 88   8 8
         9     999   9 999 9 9   999        9 9 99 9 9   999 9 99 99    99
```

COPIE A: TO:

IND. REV.

REV.

SECTION: S.P.S. -

LOC.: PREGNANA (MI)

APPR.

COMPIL. MONDUCCI

EMISS. 9 JUL 71

N.° 4T4720409GA0

Honeywell
Honeywell Information Systems Italia

DIAGNOSTIC PROGRAM - CARD LISTING

4720410S DSS 167 MARGINING TEST

CARD NUMBER

```
0151
0152
```


COPIE A:
TO:
IND. REV.
REV.

SECTION: S.P.S. -
LOC.: PREGNANA (MI)

APPR. COMPIL. EMISS. N.°

```
CARD NUMBER   0         1         2         3         4         5         6         7         8
              123456789 0123456789 0123456789 0123456789 0123456789 0123456789 0123456789 0123456789 0

0153

                0  00    0 0 0    0  0     0 0 0       0 0 0 0    0 0 0    0 0 0 0 0 0 0   0  0 00
                  1  1 11  1    11 11  1 111  1       1   11  11 111  11  11  1   11 11  1 1 1
              2     2  22 2    2 2 2    2 2 2 2 2         2 2    2    2    2    2 2    2 2 2      2
                      3 3  3 33 3  3 33 3 33         3 3  333 33  3    3    3  3 3  3  3 3  3
              4   4                                                                                4

                              6  6     6 6                6  6    6         6        6  6     6 6
              7         77      7     7  77 7  7           7        77              7    7  77 7
                        8  888  88  88 8  8  8 8    8 8           88            888   8  88 8  8
                        99   9 9 9 9  99   9 9 9       9 9 9 9 9 9 9 9 9 9 9    9 9 9 9  99        9

0154

                0  00  00      0  0   00   0  0   00   0     0 0  0     00     0 00       0  00  0
                  1  1  1  1 1    1      1    1  1   11  1  11  1     1   111 11      11     1
              2     2  2   2 2   2 2 2   2   2 2      2   2   2        2   2   2        2
                      3 3 33333 3   333 333 33  3 3 333 3333 3  3 3  33 33 33 3  333 3  3
              4   4                                                                                5

                        6 6 6 66   6  6 6 6        66  6 66       6  6  6         66
              7         777  7 77  7  7    77      77    7  7          77  7  77 7 7        7
                        888 88888  88 8 8 888    8 8 8 8   88 88   8    8  888 88888888
                        9 99 9 9  9 9 9  9 9  9 9 9  9  99 99 9    9    99 99 9  9   99 9 9
```

COPIE A: TO:

IND. REV.

REV.

Honeywell
Honeywell Information Systems Italia

DIAGNOSTIC PROGRAM - CARD LISTING

4720410S DSS 167 MARGINING TEST


```
CARD
NUMBER   0         1         2         3         4         5         6         7         8
         123456789 0123456789 0123456789 0123456789 0123456789 0123456789 0123456789 0123456789 0

0155
         0  00  0    0 00      0  0      0  0    0 0   0  0    0 0  0      0  0   0
           1  1 1  111 11     11  1  1 111  1    111  1   1     11  1  1 111  1    1 1
       2    2  2  2   2     2 2    2 2 2      2 2      2    2 2     2 2 2     2
            3  33 3333  33  3  3 3333 3  3 33 3 3333 3333333  3  3 3333 3333 33
   4   4
                                                                                    5
                66   6    6      6 6      66 6  6   666 666     6 6   6   66
   7         77     7  7 7      7  7 7        7        7         7  7 7   7   7
             88 8 8 8 888888    8 88888   8    88   8  88    88   8 88888  88
             999  9 9  9   99 9 99 9 99    9    9   9      99 9   99 9 99    9

0156
         0  00    0 0   0 00    0 0 0   0  0    0 0   0   0  0      0   0  0      0
           1  1   111  11      11  1   11 11  1 111 11  111  1  1 111 111  1    1 1
       2    2  2 2 2   2      2 2    2 2     2 2      2    2 2 2   2              2
            3  3 3   3  3 3  3  3    3  3 33 3 3333 33 3  3 3333 33  3  33  3
   4   4
                                                                                    5
             66 6      6  66         6   6  6  6   6      6 6    6     6 66
   7           7                      7    7      7'   7  7 7  77       77
               8       8    888   8  88  8 88   8   8   8 88888       888
                 9 9 9 9   99   9   9 9  9   9   9   9   99 9 99   9 9     99

         123456789 0123456789 0123456789 0123456789 0123456789 0123456789 0123456789 0123456789 0
         0         1         2         3         4         5         6         7         8
```

COPIE A:
TO:

IND. REV.

REV.

SECTION: S.P.S. -
LOC.: PREGNANA (MI)

APPR.

COMPIL. MONDUCCI

EMISS. 9 JUL 71

N.° 4T4720409GA0

Honeywell
Honeywell Information Systems Italia

DIAGNOSTIC PROGRAM - CARD LISTING

4720410S DSS 167 MARGINING TEST

CONT. SU FO. 279 FO. 278

```
CARD NUMBER   0         1         2         3         4         5         6         7         8
              12345678901234567890123456789012345678901234567890123456789012345678901234567890123456789 0
0157
                0  00   0   0 00     0 0 0   0  0  0 00  00  0  0  0  0     0   0     0   0
                  1  1 11  11     111  1  111 11  1 1   11     1  1  1      1  1     1    1
              2    2  22   2       2 2     2 2   2 2   2   2 2    2          2
                     3 3   3  3 3  3  3 3  3  3 33 33 333 3 3 3 3 3 3   333   33    33     3
              4   4
                                                                                          5
                     66      6  66       6  6   66 6  66  66    66      66   6 6 6 666 6
              7                          77   7   7 7        7    7  7  77     7     7
                                  8    888   8  88  8 88 8 8  8888  88 8 88  8 88888888 888
                      9 9 9 9    99   9   9 9  9         9    9     9           9   9
0158
                0  00  0  0     0  0     0   0     0     0     0  0  0  0 00  0 0 0 0 0
                  1  1    11   111  1     1  1     1     11   111  11  1  1     111 111  1
              2    2  2        2      2    2                  2   2  2  2     2   2 2
                     3   33     3  3   3 3   33    33    33    3   3  3 33333 33 333 3
              4   4                                                                       4
                                                                                          5
                     66  66 6         6    6 6 6 666 6  66 6         6 6666 666  6
              7          77        7  7     7    7    77          7    77
                      8   888      8 88 88 88888888 888   888       8 8  8  8 8
                          9    9 9  9          9   9    9    9 9 9 9    9999  9   9 9
              123456789012345678901234567890123456789012345678901234567890123456789 0
              0         1         2         3         4         5         6         7         8
```

COPIE A: TO:

IND. REV.

REV.

SECTION: S.P.S. -

LOC.: PREGNANA (MI)

APPR.

COMPIL. MONDUCCI

EMISS. 9 JUL 71

N.° 4T4720409GA0

Honeywell
Honeywell Information Systems Italia

DIAGNOSTIC PROGRAM - CARD LISTING

4720410S DSS 167 MARGINING TEST

CONT. SU FO. 280 FO. 279

CARD NUMBER

```
0159
0160
```

COPIE A:
TO:
IND. REV.
REV.

SECTION: S.P.S. -
LOC.: PREGNANA (MI)

APPR.
COMPIL. MONDUCCI
EMISS. 9 JUL 71
N.° 4T4720409GA0

```
CARD NUMBER   0         1         2         3         4         5         6         7         8
              12345678901234567890123456789012345678901234567890123456789012345678901234567890123456789 0

0161
                0  00     0 0 0 0   0 0 0     0 0 0     00    0   0                00 0 0 0
                  1  1 1   11 1      11 1 1    11 1 1 1   1 111  11               11 1 1  1
               2    2  2    2 2   2   2 2 2 2   2 2 2   2     2   2              22 2
                     3 333 3 33   33 3 333 333 3 333  3 33   3   3              3 3   3 3
             4   4
                                                                                        5
                     66666   66  666   666 666   666  6                   66  6 6
             7        7  7     7 7 7     7   7     7 7     7                 7       7   7   7
                       8 8  888888 8  888 88 8  888 88  8 88    8          88        8 8
                     99 999 9  9  999 9     999 9  9  9     9 9 9       99 9  9
0162
                0  00  00 0 0 0            0        0        0        0        0        0 0
                  1  1  1 111 1 11   111   1  11   1    1   1   11   1    1   1   11   1  1
               2    2  2              2                                        2        2
                     3  3      3   333   3   3   3    3  33   3  33   3   3    3   3
             4   4
                                                                                        5
                     66 6   6  6  66 6  6       66       6       666      6        66
             7        7 7                   7   7           7   7        7    7   7
                      8 8 8 8 8 8  88 8   8   8 8 8      8 8    8 8        8      8 8 8    8
                     9      9 9   9     99 99   9        99       9        99       9
```

SECTION: S.P.S. -	APPR.	COMPIL. MONDUCCI	EMISS. 9 JUL 71
LOC.: PREGNANA (MI)			N.° 4T4720409GA0

COPIE A: TO:

IND. REV.

REV.

Honeywell
Honeywell Information Systems Italia

DIAGNOSTIC PROGRAM - CARD LISTING

4720410S DSS 167 MARGINING TEST

CONT. SU FO. 282 FO. 281

```
CARD NUMBER   0         1         2         3         4         5         6         7         8
              123456789 0123456789 0123456789 0123456789 0123456789 0123456789 0123456789 0123456789 0
0163
                0  00  0          0     0   0 0         0 0 0   0  0  0 0  0 0  0  00 0 00
                  1  1 1     11     1   1 1    11        1 1 111 11 11 1 11 1 11 11  1 1  1
              2    2  2        2 2   2 2     2             2   2  2  2 2  2 2  2  22 2 2
                     3      3  3 33  3 33  3 33   3          3  33  33 333  3 3333   3 33
              4   4                                                                      5
                     66        6 6   6 6   6      666             6       6 6      6  6
              7       7        77    77    7 7 7   7    7 777     7  77   77       77  7
                      8      888    888    8 8 8 88       88   8   8 8 8      8 8       8
                     99        9     9     9             9 999  9   99999   99999    9999   9
0164
                0  00     00 0 0  0  000  00   0  0                                      0  0
                  1  1  11  1 1 11 11   11  111 11 1111111111111111111111111111111111111111 1
              2    2  2  22 2 2  2  222  22   2  2
                     333  333333  33  33  333333
              4   4

                     6   6       6       6       6                 6 6                 6  6
              7          7 7 7   7777    7 777   7        7 7 7 7             7 7 7 7
                     8    8 8 8    8888   8 8 8        8 8     8 8         8 8     8 8
                          99 99   99 99    9999      9   9   9   9   99 999 999 999 999
              123456789 0123456789 0123456789 0123456789 0123456789 0123456789 0123456789 0123456789 0
              0         1         2         3         4         5         6         7         8
```

COPIE A:
TO:
IND. REV.
REV.

SECTION: S.P.S. -
LOC.: PREGNANA (MI)

APPR.
COMPIL. MONDUCCI
EMISS. 9 JUL 71
N.° 4T4720409GA0

Honeywell
Honeywell Information Systems Italia

DIAGNOSTIC PROGRAM - CARD LISTING

4720410S DSS 167 MARGINING TEST

CONT. SU FO. 283 FO. 282

```
CARD
NUMBER   0         1         2         3         4         5         6         7         8
         123456789 0123456789 0123456789 0123456789 0123456789 0123456789 0123456789 0123456789 0
0165
           0  00                                                                      0
             1    11111 1                                                               1 1
         2     2  2
                  33  33 3
       4   4

                  6  6                                                                  6
       7         7
                 88
                 9 999
0166
           0  00                                                                      0
             1    1                                                                     1
         2     2  2                                                                       2
                  33
       4   4

                  66                                                                    6
       7         7
                 888
                 9
         123456789 0123456789 0123456789 0123456789 0123456789 0123456789 0123456789 0123456789 0
         0         1         2         3         4         5         6         7         8
```

COPIE A:
TO:
IND. REV.
REV.

SECTION: S.P.S. -
LOC.: PREGNANA (MI)

APPR.
COMPIL. MONDUCCI
EMISS. 9 JUL 71
N.° 4T4720409GA0

Honeywell
Honeywell Information Systems Italia

DIAGNOSTIC PROGRAM - CARD LISTING

4720410S DSS 167 MARGINING TEST

CONT. SU FO. 284 FO. 283

```
CARD
NUMBER   0         1         2         3         4         5         6         7         8
         12345678901234567890123456789012345678901234567890123456789012345678901234567890123456789 0
0167
          0  00  0    0     0  0   00      0  00   00  0000   0 000    00 0 0 0    0
            1  1     1 1 1 111   1   11111      1    11   1   1  1111   1 1 1  1   1
         2    2      2  22        2 2222 2  222 222 22 2222    2    22  2  22 2 222
              3      33  3 33333   3    3 3 33333 3 33  33 3   3  3 3   3  3 333    3
       4   4

              6      6 66  666666 66666  6      66666 6    66 6 6 66   66   666 6  6
         7      7   77    777 7 77   7   7 7  7777  7  77      7   777 7  7 7 7 77
              88    88       8      8 8    8  888  8  8   88888    8    8 88   8
               9    99     99999   999 9  9999   9  9  99   9  9  99  9  9 9 9 9

0168
          0  00  0 0 00  00   00000 00     00  0  000                                0
            1    1111 1   1111 1  1  111  1 1   1   111                                1
         2    22  2    22   222  2     2 2 2   2 22  22
              3 3 33 3 3 33 3 33 33    33  3 3 3   3
       4   4                                                                          4

              666 6  66    6 666    666 6 66 6  6                                    6
         7      7  7  77 7   7 7 7   7  77        7   7 7
              8          8 88 888  8  88 8  88 88   8
              9    999   9  9999999   9   999 9 99  9
```

COPIE A:
TO:

IND.
REV.

REV.

SECTION: S.P.S. -
LOC.: PREGNANA (MI)

APPR.

COMPIL. MONDUCCI

EMISS. 9 JUL 71

N.° 4T4720409GA0

```
CARD
NUMBER
          0         1         2         3         4         5         6         7         8
          123456789 0123456789 0123456789 0123456789 0123456789 0123456789 0123456789 0123456789 0
0169
          0  00  0 0 0                                                                        0
             1     1                                                                          1
          2     2  2
                   333 3
          4   4
                                                                                              5
                   6 6666                                                                     6
          7
                  88 8888
                  9   9
0170
          0  00  00                                                                           0
             1     1                                                                          1
          2     2  2  2
                   333
          4   4
                   6                                                                          66
          7         7
                  88
                    9 9
          123456789 0123456789 0123456789 0123456789 0123456789 0123456789 0123456789 0123456789 0
          0         1         2         3         4         5         6         7         8
```

COPIE A: TO:

IND. REV.

REV.

SECTION: S.P.S. -

LOC.: PREGNANA (MI)

APPR.

COMPIL. MONDUCCI

EMISS. 9 JUL 71

N.° 4T4720409GA0

Honeywell
Honeywell Information Systems Italia

DIAGNOSTIC PROGRAM - CARD LISTING

4720410S DSS 167 MARGINING TEST


```
CARD
NUMBER
         0         1         2         3         4         5         6         7         8
         12345678901234567890123456789012345678901234567890123456789012345678901234567890123456789 0
0171
          0  00  0      000   000 000 000 000 00 0          00000 0   00  000 0   00
            1  1 1 1 1 111   11111 111   1111 11  1      111     111   1     111    1
        2    2  2 2    222   22222  22   2222  2 2         222   22   2  2  222
              333 3 3 3 3 3 333 333 3  3333  3  3 3    333     3 333  33   3 333
    4   4

              666 666 666   6666 666   6666666  6         666  66 6 6 66    6 6 6  6
     7               7 777  77777  7777 777  77        777   77 77   77  77 77      7
              8 8 8 88888   888 888 88  888 88 8         8888  8   8888 8  8   8
               9999 9999   99999 999 99 99 999     9   999   99  9 9 9   99  9 9
0172
          0  00   0  000 0    00 0000   0   0    000 0000 00 00 00 00 0 0          0
            1     1     111    1 1111   1   1    111 11111  1  1  1   11            1
        2    22 22  2   22   2                        2   22 22 22 22 2 2
              333 33   3 3333                         3  3  3  3  3   33
    4   4

              66 66   66 666    6 66  66 666    6    66 66 66 66 66 6 6            6
     7       7  77  77 77 7  7 7 7   7       7 7 7 7   7  7  7  7   77
              888888 8  8  88 8  088  88   8  8 888   88 88 88 88 88 8 8            8
               9 9   99  9      9 9   9 9   9 9   9 99  9  9  9  9   99
         0         1         2         3         4         5         6         7         8
         12345678901234567890123456789012345678901234567890123456789012345678901234567890123456789 0
```

COPIE A:
TO:
IND. REV.
REV.

SECTION: S.P.S. -
LOC.: PREGNANA (MI)

APPR.
COMPIL. MONDUCCI
EMISS. 9 JUL 71
N.° 4T4720409GA0

Honeywell
Honeywell Information Systems Italia

DIAGNOSTIC PROGRAM - CARD LISTING

4720410S DSS 167 MARGINING TEST

CONT. SU FO. 287 FO. 286

```
CARD
NUMBER   0         1         2         3         4         5         6         7         8
         123456789 0123456789 0123456789 0123456789 0123456789 0123456789 0123456789 0123456789 0

0173

          0  00                                     0 0   0                   0
            1    1 1                                     1                     1
        2     22 2 2                                   2 2
              3333                                   3 3 333
    4   4

                6 66                                 666 6 66                  6
     7            7 7                                     7
              88 8                                   888 8888
              99 99                                  999 9 99                   9

0174

          0  00  0  0 0 0 0 0 0                                               0  0
            1                  1                                               1
        2     2  2  2 2 2 2 2 2
                3      3 3  3 3
    4   4

              6666 6 66666 6 6
     7        7  7       77 7                                                  7
               8 88888888   8
               999   99 9

         123456789 0123456789 0123456789 0123456789 0123456789 0123456789 0123456789 0123456789 0
```

0	1	2	3	4	5	6	7	8
		MONDUCCI		9 JUL 71		4147204009GA0		

REV.

COPIE A: TO:

IND. REV.

SECTION: S.P.S. -

LOC.: PREGNANA (MI)

APPR. | COMPIL. | EMISS. | N.°

Honeywell
Honeywell Information Systems Italia

DIAGNOSTIC PROGRAM - CARD LISTING

4720410S DSS 167 MARGININO TEST

CONT. SU FO. 288 FO. 287

```
CARD NUMBER   0         1         2         3         4         5         6         7         8
              123456789 0123456789 0123456789 0123456789 0123456789 0123456789 0123456789 0123456789 0

0175

                0  00  00 00 0       0      00 00  000  0 0      00  0 0             0      0000
                  1  1   1  1 111111 11111  1  11   11 1 11111  11 1 11111111111 11111    1 1
              2     2  22 22 2       2      22 22  222  2 2      22  2 2             2      222
                     3333333 333333 33333333 333   3333 333333 3333 33333333333 33333
              4   4

                     6       6       6           6    66 6        66 6      6     6    66
              7       7 7   7       7        77  7 77    7       7    7       7 7 7    7  7  7
                     888 88  8       8     88 88 8 8  8 8 8    88 8 8 8            8      8
                     9999 9 99      99      999   9   9 999    9  9 999       99  99   999

0176

                0  00  00   000      00 00 0 00  00   0  0 0 00 0 0 0 0 0 00   0 0 0 00  00
                  1  1 1 111   11111  1  1 1  11  111 11 1 1  1 1 1 1 1 1  111 1 1 1  11  1
              2     2  22   222      22 22 2 22  22   2  2 2 22 2 2 2 2 2 22   2 2 2 22  2   2
                     33 333 3 3 33333 3 3333 33  333 3333 33 3 3 3 3 3 3  333 3 3333 33
              4   4

                     6666      66     66  6   6    6   6        6      666 6  6  6   6
              7            777777 7  7   7   7  777  7     7 7 777 7 7777     7  7   7  7  7
                     8  8 88     8 88 8  8888  8      8 88 88             8      8888  8
                     9 99    9 99    9999999     9 99 9 9999   9 99  9 9999 99 99999
```

COPIE A:
TO:
IND. REV.
REV.

SECTION: S.P.S. -
LOC.: PREGNANA (MI)

APPR.
COMPIL. MONDUCCI
EMISS. 9 JUL 71
N.° 4T4720409GA0

Honeywell
Honeywell Information Systems Italia

DIAGNOSTIC PROGRAM - CARD LISTING

4720410S DSS 167 MARGINING TEST

CONT. SU FO. 289 FO. 288

```
CARD NUMBER   0         1         2         3         4         5         6         7         8
              12345678901234567890123456789012345678901234567890123456789012345678901234567890123456789 0

0177
                0  00    0   000  0 0 0 00 0         0 0           0     0  0 0  0    0000 000
                  1  1   111   11 1 1 1  1 11111111 1 1111111111 11111 11 1 11 111     1    1
              2     2  22   222  2 2 2 22 2         2 2           2     2  2 2  2    2222 22
                       33 333   3333 333333 3333333333 3333333333 3333333333 3 3 333 3333     3
            4   4

                       66    6    66 6      6        66 6    6     6        6 6 6      6  6
             7         7 77 7 77    7  7   7          7      7 7 7      7   7    7 7        7
                          8 8  8 8 88 88  8      8 8 8          8    8 888 8 8 8  88  8
                        9 9  9   9 99999 9 99      9 999     99  99     999999 9  9 99  99

0178
                0  00      0 0   000 0   00 00 000  0 00  0 0 0 00  0  0    00  0 00  0   0
                  1  1 111 1 111   1 111  1  1  1    11    111  1     1     1     1     1 1
              2     2  2  2 2   222 2   22 22 22   2 2   2 2 2 2   2      22  2 2   2
                       3333 3 333 3 333333 3333333 33 33 3  3 33 3 3   3     333 3 3 3
            4   4                                                                          4

                       66   66   6 66    6        66 6  6  6  66  66      66 6 6   6
             7         7      7 7 7   7   7   7 7  7  7  77 7  77  7        7 77  7 77     7
                        8 888    88  8  8 8 88 8 8    88  8 88  88  8  8   888  8     8  8
                         99 9999   9999   99      9     9    9    9              99 99    9

              12345678901234567890123456789012345678901234567890123456789012345678901234567890 1
              0         1         2         3         4         5         6         7         8
```

COPIE A: TO:

IND. REV.

REV.

SECTION: S.P.S. -

LOC.: PREGNANA (MI)

APPR.

COMPIL. MONDUCCI

EMISS. 9 JUL 71

N.° 4T4720409GA0

Honeywell
Honeywell Information Systems Italia

DIAGNOSTIC PROGRAM - CARD LISTING

4720410S DSS 167 MARGINING TEST

CONT. SU FO. 290 FO. 289

```
CARD
NUMBER      0         1         2         3         4         5         6         7         8
            123456789 0123456789 0123456789 0123456789 0123456789 0123456789 0123456789 0123456789 0
0179
            0  00  00 00  0 0 0  0  0 00    0 0  0      0  0      0  0  0  00 0 0 0
              1  1  1  1  1  11  1  1 11    111  1     11  1     11  11  11  1  1 1 1 1
            2    2  2  2    2 2    2 2    2 2        2        2  2  2  22 2 2
                 3333 3 3 3  3  3 33 333 333 3  33 33  3  33 333 3  3  3  3 33 3 3
            4   4
                                                                                      5
                 66 6   6 6      6  6   66      666      666          6   666
            7    7  7   7777     7  7 7  77    7  7     7  77         7 7   7  7
                 8  88  8 88   8  8 88 8      8 8  8   888  8       8     8
                 9   9   9    9     9 9  9 9   99 9 9   9999 9 9 9 9  99 99999
0180
            0  00  0 00  0 0 0 000 00 00 0 0 0 0 0  0  00 0 0  00  0 0 0 00        0
              1    11  11 1 1 1   1  1  1 1 1 1 1 111 11  1 1 111  11 1 1 1  1       1
            2    22 2 22  2 2 2 222 22 22 2 2 2 2 2  2  22 2 2  22  2 2 2 22
                 33333 33 3 3 33  3 33 33 3 3 333 333 33 33 3 333 333 3 3 33 3
            4   4

                 666   6   6   6 6   6   6   6  6 6  6 6  6   6   6        6
            7    77     7  77  7 7 7  7  77 7   7 7 7 7     7 7  77  7       7
                   888 8    8 8  8  8 8    8  8    8    8  8  8    8
                 9    9 9999 999 99 999 9999 9999 999 99 9999 99999 9999 9999
            123456789 0123456789 0123456789 0123456789 0123456789 0123456789 0123456789 0123456789 0
            0         1         2         3         4         5         6         7         8
```

COPIE A:
TO:
IND. REV.
REV.

SECTION: S.P.S. -
LOC.: PREGNANA (MI)

APPR.
COMPIL. MONDUCCI
EMISS. 9 JUL 71
N.° 4T4720409GA0

Honeywell
Honeywell Information Systems Italia

DIAGNOSTIC PROGRAM - CARD LISTING

4720410S DSS 167 MARGINING TEST

CONT. SU FO. 291 FO. 290

```
CARD
NUMBER     0         1         2         3         4         5         6         7         8
           123456789 0123456789 0123456789 0123456789 0123456789 0123456789 0123456789 0123456789 0
0181
           0  00      0     0   0  0    00     0            0    0 0 0 0 0 0   0  0
             1  1     1     1  1 1  1  1 11     1     1  1  11     1 1 1 1 1 111 11 1
          2    2  2      2 2   2 2 2     2     2  2 2      2    2 2 2 2 2 2   2
                33    3 33333 3  3  3 33 33     333333 33  3 3     3 3 3 333 333 33
        4   4

                66      6 66  6  6    6         6 6 66  6           6 66    6  6
          7     7       777   77 7    7         7 777   7       7 77    77 7 7    7  77
                    8  8  8    88 8    88        8  8 88  88 8   8 8     8 8     8 8
                9   9  99 9  99       99 9       9 999 9 9   9     999 99999999 99 9
0182
           0  00   00000    0000  00 0  00 0 00 0 0  0000  00   0000 00000 0 0000 0 0
             1  1 1     1111    11  1 11  1 1  1 1 11    11  111    1     1 1    1 1 1
          2    2  222222    2222  22 2  22 2 22 2 2  2222  22   2222 22222 2 2222 2
                33 3   3333   333  3333 3333  3 3 33  333   333  333 3   3 3   33 3
        4   4

                666      6  6     6       6  6   6  66  6 66   66   6 66  6  6   6
          7     7  7777 7  7 777 7 7  7  7  7 777 7 77 7  77 7 77     7777  7 77  7  7
                    888    8 8   8  88 88 8 8       88888888   8888  8888  8 8       8
                999 99   9 99 99 999 999999 999 999 99  9 99 9 99 999999999 99 9999
           123456789 0123456789 0123456789 0123456789 0123456789 0123456789 0123456789 0123456789 0
           0         1         2         3         4         5         6         7         8
```

COPIE A:
TO:
IND. REV.
REV.

SECTION: S.P.S. -
LOC.: PREGNANA (MI)

APPR.
COMPIL. MONDUCCI
EMISS. 9 JUL 71
N.° 4T4720409GA0

Honeywell
Honeywell Information Systems Italia

DIAGNOSTIC PROGRAM - CARD LISTING

4720410S DSS 167 MARGINING TEST

CONT. SU FO. 292 FO. 291

```
CARD
NUMBER      0         1         2         3         4         5         6         7        8
            123456789 0123456789 0123456789 0123456789 0123456789 0123456789 0123456789 0123456789 0
0183
          0  00  0 00 00000  00000    0000    00 0 0  00  0000  00  0 0 0 00000 00 0
            1  1  1  1     11     1111    1111  1 1 11  11    11  11 1 1 1     1  1 1
        2    2  2 22 22222  22222    2222    22 2 2  22  2222  22  2 2 2 22222 22
             3333 3 3 3 33 3   3333   33333 33 3 333 33 3 3333 33 3 3 33  3 3333
    4   4

             66          6      6  6     6   666             6   6     6 6
        7    7  77 77777 7 7777 7  7 777   7 7   7 77  7777      7   77  7 77  7  7
              8      8 8 8  888    8 8      8            8   888 8     8 88  88
             9   9 9  9  99 99   9 99 99  99 99999  99 9  99   9 9999 999 9 9999   9

0184
          0  00  00   0 0 0000   0 0000 0 0 00   00 0 0  0000 000000 0 0  0 0     00  0
            1  1 1 111 1 1    111 1    1 1 1  111  1 1 11    1      1 1 11 1 11111  1
        2    2  22   2 2 2222   2 2222 2 2 22   22 2 2  2222 222222 2 2  2 2     2
             33 333 3 333  333 3    3 333  333  3 3 33  333 3  3 3 3 3333333333
    4   4

             666  6       6  6  66   6   66    6   6  66   6 66   6       6   6
        7    7  7     7  7 7  7 77777   777 7 7 777 7 77     77 7  777     7   7
              8    8 8 888      8888   8 88   8       8888  88888   8  8 8   8 8  8
             9999 99 9999 99 99 99 99999999 9 999 999 99 9999999  999999 9 9 9
```

COPIE A: TO:

IND. REV.

REV.

SECTION: S.P.S. -

LOC.: PREGNANA (MI)

APPR.

COMPIL. MONDUCCI

EMISS. 9 JUL 71

N.° 4T4720409GA0

```
CARD NUMBER   0         1         2         3         4         5         6         7         8
              123456789 0123456789 0123456789 0123456789 0123456789 0123456789 0123456789 0123456789 0

0185

   0  00    0 0 0 0 0  0 000  00 00 0000  00  0  0000 000000 000   0 0 0 0 0 0
     1  1    1 1 1 1 11 1    11  1  1     11  11 11     1       1   111 1 1 1 1 1 1 1
  2     2  22 2 2 2 2  2 222  22 22 2222  22  2  2222 222222 222   2 2 2 2 2
            3333 33333 333333333  3333  333   33 33  333 3  3 33 3333 3333333 3
4   4

            66                  6    66  6 66     66   6 66    66
 7          77 77  7  77  7     7 7   77 7  77  77 77     77 7       777  7  77
            8 8   8 8 88 8 888  8  88 88888888     8888  88888 8       8 8 8 88  8
               99  99    99 9   999   99  9 99 99  99 9999999  99  9 99   99

0186

   0  00    0 000   00 00   0 0 0 0 0 0 0   0 0000 0   0    0  0 0000 0 0 000
     1  1 11 1   111  1  111 1 1 1 1 1 1 111 1    1 111 1111 11 1    1 1 1   1
  2     2  2 2 222   22 22   2 2 2 2 2 2 2   2 2222 2   2    2  2 2222 2 2 22   2
            33333333333 33 3333 333 3 3 333 333 33 3333333 3333 33 3    3 333
4   4

            66        6   6         6     6   6 6     6  6    6 6  66   6   66
 7          77  7      7 7    777 7   77 7     7 77    7  7 77   7 77777   777
            8  8 888    8  8    8 8     8   8   88 8 8            8888   8 88  8
             9 99 9   99 999 9 99  9999 9999 999 99 9 9 9 999 99 99 99 99999999
```

COPIE A: TO:

IND. REV.

REV.

Honeywell
Honeywell Information Systems Italia

DIAGNOSTIC PROGRAM - CARD LISTING

4720410S DSS 167 MARGINING TEST

CONT. SU FO. 294 FO. 293

```
CARD NUMBER   0         1         2         3         4         5         6         7         8
              123456789 0123456789 0123456789 0123456789 0123456789 0123456789 0123456789 0123456789 0
0187

   0  00  0  0  00 00 0000 00000000 0 0 0 0 0   0000     0 000   0 0 0  00 00
     1  1  11 11  1  1    1        1 1 1 1 1 111    11111 1   111 1 1 11  1  1
  2    2  2  2  22 22 2222 22222222 2 2 2 2 2   2222     2 222   2 2 2  22 2
        3333 33  3333  333 3    3 3 3 333 3 333  3 333333333333 333333  33   3
4   4

        66     6    66   6 66   6 6     6     6              6 6 6    6
 7      77  77 7 7   77     77777   777 7   7 7 7777 77  7      7      7 7
        88     8  88 8888  88888    8 8   8  8 8 8     8 888 8 8 8 8  8  8  8
           99  999   99 9999999  9 9999999 99 99  99  9 99 9  9  9 9   999

0188

   0  00  00 0 0000  00  0 0000 00000000  00 0 0 00 0000  0  0000     0 000 0
     1  1 1 1 1    11  11 1    1        11  1 1 1  1    11 11    11111 1   1 1
  2    2  22 2 2222  22  2 2222 22222222  22 2 2 22 2222  2  2222     2 222
        3333 3  333   3333  333 3    3 3333333 33 3  3333333  3 33333333333
4   4                                                                      4

        66  6 66  6 66    66   6 66   6     6 6             6
 7      77 7  77 7  77 7  77     77777  7    7  77 77777 7 7 7777 77  7
        888   88888888  8 8888  88888    88         8      8 8 8     8 888   8
         9 99 99  9 99 99 99 9999999  9 9  9 99  9 9  999  99  99  9 99 9

              123456789 0123456789 0123456789 0123456789 0123456789 0123456789 0123456789 0123456789 0
              0         1         2         3         4         5         6         7         8
```

COPIE A:
TO:
IND. REV.
REV.

SECTION: S.P.S. -
LOC.: PREGNANA (MI)

APPR.
COMPIL. MONDUCCI
EMISS. 9 JUL 71
N.° 4T4720409GA0

Honeywell
Honeywell Information Systems Italia

DIAGNOSTIC PROGRAM - CARD LISTING

4720410S DSS 167 MARGINING TEST

CONT. SU FO. 295 FO. 294

```
CARD NUMBER   0         1         2         3         4         5         6         7         8
              12345678901234567890123456789012345678901234567890123456789012345678901234567890123456789 0

0189

                0  00     00 0 0 00  0000 00    00 0 0 0 00 0 00   0 0  0  0 00 000 0000 00
                  1  1 11  1 1 1  11    1  1111  1 1 1 1  1 1  111 1 11 11 1  1   1    1  1
              2    2    22 2 2 22  2222 22    22 2 2 2 22 2 22   2 2  2  2 22 222 2222 2
                     3 3 33 3 33 33  333  3333 33 3 3 33 333  333 3 33 33333 333 3    3
              4   4
                                                                                          5
                     6 6   6 6                 6    6    6 6      6          6   6 66   6
              7      7  7 7 7  777 77777  7     77   77  7  7   7   7  7  77   7  77777
                     8   8           8   88  8  8 8     8  8 88 8   8  8 88    8   8888    8
                     9 99 9999  99 9  99999 999999999 99999 999999 99 99999 9   9 99 999

0190

                0  00  0 0 00  0 00 00 0 0000 00000   0   0   0   0   0   0 0 0  0  0  0 0
                  1  1  1 1  11 1  1  1 1    1     111 111 111 111 111 111 1 1 11 11 11 1 1
              2    2    2 22  2 22 22 2 2222 22222   2   2   2   2   2   2 2 2  2  2  2
                     3 333  3333  3333 3  333 3  3   3       3   3       3333333 33333 3
              4   4

                     6    66     6    6 66   6 66        6          66          6  66  6   6
              7      7   777 7  7 7  7  77     77                          7 7   7     7
                     8  8 88  8 8  88   8888  888     8 88  8 8 8 8  8   8 8 8    8 8  8  8
                     9999999 99 999  99 99 999999       9            999 99    9 9 99

              123456789012345678901234567890123456789012345678901234567890123456789012345678901234567890 0
              0         1         2         3         4         5         6         7         8
```

COPIE A:
TO:
IND. REV.
REV.

SECTION: S.P.S. -
LOC.: PREGNANA (MI)

APPR.
COMPIL. MONDUCCI
EMISS. 9 JUL 71
N.° 4T4720409GA0

Honeywell
Honeywell Information Systems Italia

DIAGNOSTIC PROGRAM - CARD LISTING

4720410S DSS 167 MARGINING TEST

CONT. SU FO. 296 FO. 295

```
CARD NUMBER   0         1         2         3         4         5         6         7         8
              12345678901234567890123456789012345678901234567890123456789012345678901234567890123456789 0

0191
                0  00  0           0     0     0     0   0       0 00 0       0  0  0 0000 0
                  1  1 11111111   111   111   111   1   1        1  1 1111111 11 11 1    1 1
              2    2                  2     2     2           2 22 2       2  2  2 2222
                     3 3    3   333   3 3   3 3   3           33333 33   33333 33 3    3
            4   4

                     6       6  66 6  6  6  6  6    6            6   6       6
             7       7          77    7     7     77       7   7   7        77   7 777 7   7
                     88      8  88 8  8  8  88 8  8    8       8 88  8      8  8   88 88   8
                     9          999   999   999   999 99 9999  99 9 99  99   99  999  999

0192
                0  00   0                                                                  0
                  1     . 1                                                                 1
              2    2 2 2
                       33
            4   4

             7          7
                     88                                                                   88
                   9 999

              12345678901234567890123456789012345678901234567890123456789012345678901234567890123456789 0
              0         1         2         3         4         5         6         7         8
```

COPIE A: TO:

IND. REV.

REV.

SECTION: S.P.S. -

LOC.: PREGNANA (MI)

APPR.

COMPIL. MONDUCCI

EMISS. 9 JUL 71

N.° 4T4720409GA0

Honeywell
Honeywell Information Systems Italia

DIAGNOSTIC PROGRAM - CARD LISTING

4720410S DSS 167 MARGININO TEST

CONT. SU FO. 300 FO. 296

```
CARD
NUMBER      0         1         2         3         4         5         6         7         8
            12345678901234567890123456789012345678901234567890123456789012345678901234567890
0193
                                                                                        0
                0  00                                                                   1
                  1      1
              2     2    2
                       3 3
            4   4
                       666
             7         7
                       8 8                                                              8
                     9                                                                   9
9999        58130928022916872143132659528199456426830760024384204904756184631291491591593531
                CARDS N 193
```

COPIE A: TO:

IND. REV.

REV.

SECTION: S.P.S. -

LOC.: PREGNANA (MI)

APPR. CM.

COMPIL. MONDUCCI

EMISS. 9 JUL 71

N.° 4T4720409GA0

QUESTA PAGINA E' STATA LASCIATA IN BIANCO PER RAGIONI DI IMPAGINAZIONE.

THIS PAGE IS INTENTIONALLY LEFT BLANK.

E N T R Y T A B L E

ALTPRI	01	00F6	00F7	CHRTS	9F	0202	02A1	DEPINT	00	02AC	02AC	HLT	01	02A2	02A3	JUMP	77	0188	01FF
LETT	9F	0052	00F1	LF	13	0174	0187	PRINT	73	0100	0173	READER	01	02A8	02A9	START	05	10DE	10E3
TEMUC	00	00F3	00F3	U1	06	0B95	0B9B	UDISC1	00	02AA	02AA	UDISC2	00	02AB	02AB	UN	07	0B8D	0B94
YBID7	02	03FA		YMUNI	01	07A8		YREADB	02	02AE		YTYPRA	01	0482		YUNIT	01	02AE	

N A M E T A B L E

ALU1	01	0C81	0C82	ALUN	01	0C83	0C84	DEP1	00	00F2	00F2	DEP7	00	0C7F	0C7F	DEP0	00	0B8C	0B8C
DS161	18	0C89	0CA1	G01	03	13AA	13AD	G02	05	1436	143B	G05	03	1308	130B	HLT1	03	02A4	02A7
HLT9	03	00FC	00FF	INEX	05	12F2	12F7	LF05	05	1456	145B	MA	03	12C6	12C9	MARE	01	0C85	0C86
MI	05	12B2	12B7	MO	05	12E8	12ED	NA	02	0C28	0C2A	NADISC	2B	0EA1	0ECC	NAPRI	01	10E4	10E5
NCHRTS	01	0B9C	0B9D	NE	27	0C2B	0C52	NF	27	0C53	0C7A	NI	05	12DC	12E1	NIDISC	26	0F1A	0F40
NODIS1	01	154A	154B	NOPRI	01	0B9E	0B9F	NUMERO	02	0E8F	0E91	OPEE	1C	0D41	0D5D	OPEF	20	0DCD	0DED
OPEI	1D	0CA2	0CBF	OPPRI	05	1116	111B	PARAM1	00	0C7D	0C7D	PIU1	00	0C7E	0C7E	PRINT0	01	0200	0201
RIDIS	01	1224	1225	SE	03	12D4	12D7	SEC0	01	0C87	0C88	SERV	01	0C7B	0C7C	SERVIE	2B	0FFF	102A
SERVIF	3A	1066	10A0	SERVII	26	0F8D	0FB3	SI	00	0C80	0C80	SUBWAI	05	152A	152F	TEM	00	1529	1529
TITOLO	05	10FE	1103	U	00	1560	1560	UNITA	01	00F4	00F5	UNSAE	15	0BE5	0BFA	UNSAF	17	0C10	0C27
UNSAI	16	0BBA	0BD0	UNSEE	13	0BD1	0BE4	UNSEF	14	0BFB	0C0F	UNSEI	15	0BA4	0BB9	WAIT01	00	1528	1528
WAIT1	05	1536	153B	WAITA	01	1526	1527	WAITZ	03	1546	1549								

N A M E T A B L E

0	00	0000	0000	A	01	1FDF	1FE0	AL14PA	01	1B74	1B75	ALARM1	15	1CF4	1D09	ALARM2	14	1D0A	1D1E
ALARM3	16	1D1F	1D35	ALARM	05	1CC8	1CCD	ALENT1	01	1BB2	1BB3	ALESCE	01	1BB4	1BB5	ALFA	01	1BA0	1BA1
ALFO	01	1BA4	1BA5	ALFU	01	1BA6	1BA7	ALLARM	03	1CF0	1CF3	ALLETT	01	1A75	1A76	ALLUD1	01	1BAE	1BAF
ALLUD2	01	1BB0	1BB1	ALUD1	01	1BAA	1BAB	ALUD2	01	1BAC	1BAD	AT1701	01	1AFD	1AFE	AT1703	01	1AF9	1AFA
AT1710	01	1AFB	1AFC	ATT	01	1D66	1D67	AV	01	0DD4	0DD5	B	01	1FE1	1FE2	BETA	01	1BA2	1BA3
BYPA90	03	16AA	16AD	BYPASS	05	166A	166F	C	01	1FE3	1FE4	CAER	01	1A77	1A78	CAL	00	1B73	1B73
CAPE	01	19AE	19AF	CAPER9	03	17FE	1801	CAPERC	05	17CE	17D3	CAPET	07	1A1B	1A22	CATEP1	05	0AD2	0AD7
CATEP4	03	0AEA	0AED	CATEPO	03	0AC8	0ACB	CATEPS	03	1A83	1A86	COL	00	1B72	1B72	COMPE1	05	1CA2	1CA7
COMPE2	05	1CA8	1CAD	COMPE3	05	1CAE	1CB3	COMPE4	05	1CB4	1CB9	COMPE5	03	1CC4	1CC7	COMPER	05	1C92	1C97
D	01	1FE5	1FE6	DATAS	00	0DBC	0DBC	DATASH	03	0DBD	0DC0	DSHIFT	04	0DC1	0DC5	EFFE8	00	19A7	19A7
EGOLT	07	1A3B	1A42	ENTRA	8F	04B8	0547	ERCA2	01	19B0	19B1	ERCAP9	03	17CA	17CD	ERCAPE	05	17A0	17A5
ERCAT	07	1A23	1A2A	ERROR	01	120E	120F	ERRRET	1D	1C28	1C45	ESCE	6D	06F8	0765	FALTA	00	1B8B	1B8B
FALTI	00	1B76	1B76	FINE	01	0AAA	0AAB	FULT	1D	1C71	1C8E	IN	01	0DCC	0DCD	INMEM	05	1C22	1C27
INTE	05	1A06	1A0B	INVERT	00	1BB6	1BB6	LETE	05	1A00	1A05	MARET	07	1A2B	1A32	MOD112	03	11E6	11E9
MOD30	03	11F8	11FB	MOD31	03	117C	117F	MODE01	13	1FB3	1FC6	MODE10	03	11C4	11C7	MODE11	03	11CC	11CF
MODE12	03	11DA	11DD	MODE2	03	113E	1141	MODE33	03	116A	116D	MODE34	03	1180	1183	MODE3	03	1148	114B
MODE44	03	115E	1161	MODE4	03	1150	1153	MODE5	03	118E	1191	MODE6	03	11A0	11A3	MODE7	03	11A8	11AB
MODE80	03	1F9B	1F9E	MODE81	03	1F9F	1FA2	MODE82	03	1FA3	1FA6	MODE83	03	1FA7	1FAA	MODE84	03	1FAB	1FAE
MODE85	03	1FAF	1FB2	MODE8	03	11B2	11B5	MODE9	03	11BA	11BD	MODE	03	111E	1121	MODISC	01	1FE7	1FE8
MOD01	03	1136	1139	MOD02	03	11FC	11FF	MODO	03	123C	123F	NTEST	01	1A4B	1A4C	PARA16	00	19A5	19A5
PARA20	00	19A6	19A6	PARAM1	00	199F	199F	PARAM2	00	19A0	19A0	PARAM3	00	19A1	19A1	PARAM4	00	19A2	19A2
PARAM8	00	19A3	19A3	PARAM9	00	19A4	19A4	PARAMS	00	1A79	1A79	PARASH	00	0DB0	0DB0	PARASI	04	0DB1	0DB5
PASSI	00	1BA8	1BA8	PEOOT	07	1A13	1A1A	POERRO	0C	1BF4	1C00	POHEA1	00	1A87	1A87	POHEAD	02	19D3	19D5
POHEAR	02	19E5	19E7	POINDI	05	19C4	19C9	POINDR	02	19CA	19CC	POLEGE	05	19CD	19D2	POMARE	01	19AC	19AD
POS1	05	1FD3	1FD8	POS202	05	1FCD	1FD2	POS5	05	1FD9	1FDE	POSAV	05	19BC	19C1	POSAVA	01	19C2	19C3
POSIVE	05	1248	124D	POSIZI	05	19B6	19BB	POSM1	05	1FC7	1FCC	POSTEP	28	1BB7	1BDF	POTESE	01	19AA	19AB
POVE00	03	1A7A	1A7D	POVE01	01	1AEE	1AEF	POVE05	00	1A7E	1A7E	POVE06	02	1A7F	1A81	POVE10	05	1276	127B
POVE16	05	128C	1291	POVE17	05	12D0	12D5	POVE18	01	12F2	12F3	POVE30	03	1394	1397	POVE32	05	13C8	13CD
POVE34	05	13BE	13C3	POVE35	03	142E	1431	POVE40	01	140C	140D	POVE49	03	1284	1287	POVE50	03	129C	129F
POVE51	03	12A4	12A7	POVE52	03	12A8	12AB	POVE69	05	132C	1331	POVE80	03	1362	1365	POVE95	05	138A	138F
POVE98	03	1408	140B	PSHIFT	05	0DB6	0DBB	PTTERN	11	1AFF	1B10	RADPA1	01	1AF0	1AF1	RADPA2	01	1AF2	1AF3
RADPO1	00	1A88	1A88	RADPO2	00	1A89	1A89	RADPOS	13	1A8A	1A9D	READD1	02	19DC	19DE	READDR	05	19D6	19DB
REEGOL	01	19B2	19B3	REFUS1	05	16F8	16FD	REFUS2	05	1720	1725	REFUS3	05	1740	1745	REFUS4	05	1770	1775
REGIVE	05	1512	1517	REHO90	03	14F0	14F3	REHOM1	03	148A	148D	REHOM2	03	14BA	14BD	REHOME	05	1446	144B
RELEGE	05	19DF	19E4	RESEGE	01	19B4	19B5	RESET	01	1A0F	1A10	RETHOM	01	1A11	1A12	REVE08	2A	1C46	1C70

N A M E T A B L E

REVE11	05	1524	1529	REVE12	03	153A	153D	REVE20	01	155C	155D	REVE60	05	1580	1585	REVE65	05	1592	1597
REVE75	03	15A8	15AB	REVE77	05	1610	1615	REVE80	05	161E	1623	REVE81	01	1650	1651	REVE99	03	1558	155B
REVEA1	02	19F1	19F3	REVEA	02	19EE	19F0	REVEAD	05	19E8	19ED	REVEDO	01	1AF6	1AF7	REVELE	05	19FA	19FF
REVENO	00	1AF5	1AF5	REVERE	05	19F4	19F9	REVESR	00	1AF8	1AF8	REVEST	00	1AF4	1AF4	REWARN	1A	1C01	1C1B
SEEIN	1B	1FE9	2004	SEEKAV	05	0DCE	0DD3	SEEKIN	05	0DC6	0DCB	SEGET	07	1A43	1A4A	STAM9	03	1950	1953
STAMP1	05	1896	189B	STAMP2	05	18A6	18AB	STAMP3	05	18C6	18CB	STAMP9	03	18FC	18FF	STAMP	05	1910	1915
STAMPA	05	1880	1885	START2	05	087A	087F	STEPS9	03	1996	1999	STEPS	05	1954	1959	STUMP9	03	150E	1511
STUMP	05	14F4	14F9	SUBWAT	05	1D3C	1D41	SUBWAY	05	1D42	1D47	SW1A	05	1802	1807	SW1AND	03	1816	1819
SW1B	05	1842	1847	SW1NOR	03	183A	183D	SW1NUR	03	1878	187B	SW1UND	03	1850	1853	SW1V	03	185E	1861
SW1Z	05	1824	1829	T00S00	00	1A82	1A82	T01STR	03	0B20	0B23	T02STR	03	0B28	0B2B	T03STR	03	0B30	0B33
T04STR	03	0B38	0B3B	T05STR	03	0B40	0B43	T06STR	03	0B48	0B4B	T07STR	03	0B50	0B53	T08STR	03	0B58	0B5B
T09002	05	0B78	0B7D	T09010	03	0BAE	0BB1	T09STR	03	0B60	0B63	T10005	05	0BE0	0BE5	T10010	03	0BEA	0BED
T10015	05	0C04	0C09	T10STR	03	0BCC	0BCF	T11001	05	0C24	0C29	T11010	03	0C34	0C37	T11015	03	0C3C	0C3F
T11020	03	0C4E	0C51	T11STR	03	0C14	0C17	T12005	05	0C76	0C7B	T12010	03	0C96	0C99	T12015	03	0C9E	0CA1
T12020	03	0CAA	0CAD	T12STR	03	0C62	0C65	T13005	05	0CCE	0CD3	T13010	03	0CD8	0CDB	T13015	05	0CE0	0CE5
T13020	03	0CEE	0CF1	T13STR	03	0CBE	0CC1	T14001	05	0D1E	0D23	T14002	01	0D40	0D41	T14003	03	0D42	0D45
T14004	03	0D46	0D49	T14005	03	0D4A	0D4D	T14PAR	03	1B6D	1B70	T14PRM	00	1B71	1B71	T14PTR	05	0D98	0D9D
T14STR	03	0D02	0D05	T15STR	03	0DA8	0DAB	T16000	05	0DDE	0DE3	T16001	03	0DEE	0DF1	T16002	03	0DF6	0DF9
T16003	03	0E1A	0E1D	T16004	03	0E2A	0E2D	T16010	05	0E0A	0E0F	T16STR	03	0DD6	0DD9	T17001	0A	1B47	1B51
T17002	02	1B5E	1B60	T17003	0B	1B61	1B6C	T17011	05	0E4E	0E53	T17020	03	0E86	0E89	T17030	03	0EC2	0EC5
T17033	03	0EE4	0EE7	T17034	05	0EF8	0EFD	T17035	01	0F08	0F09	T17065	03	0F34	0F37	T17070	01	0F48	0F49
T17080	03	0F74	0F77	T17STR	05	0E32	0E37	T18000	03	1006	1009	T18001	03	1010	1013	T18006	05	0FB6	0FBB
T18007	05	0FC4	0FC9	T18008	03	0FF8	0FFB	T18009	05	1014	1019	T18011	03	101A	101D	T18014	03	1022	1025
T18015	03	1026	1029	T18016	03	102A	102D	T18018	03	1032	1035	T18021	05	10E4	10E9	T18030	03	1096	1099
T18079	01	10EE	10EF	T18106	03	0FBC	0FBF	T18108	03	0FDC	0FDF	T18STR	03	0F80	0F83	TAIL02	05	0976	097B
TAIL0A	46	1D68	1DAE	TAIL0B	46	1DAF	1DF5	TAIL0C	34	1DF6	1E2A	TAIL0D	3E	1E2B	1E69	TAIL0E	36	1E6A	1EA0
TAIL0F	30	1EA1	1ED1	TAIL0G	45	1ED2	1F17	TAIL0H	41	1F18	1F59	TAIL0I	40	1F5A	1F9A	TAIL20	03	0AB6	0AB9
TAIL	01	0966	0967	TARA01	05	1CCE	1CD3	TESET	07	1A33	1A3A	TESTS	27	1A4D	1A74	TETE	02	1A0C	1A0E
TOMEM	05	1C1C	1C21	TOP001	01	19A8	19A9	TOP101	03	092E	0931	TOP10	05	0960	0965	TOP110	01	08B8	08B9
TOP111	03	094A	094D	TOP1	03	0958	095B	TOP	03	091E	0921	TRASCO	10	0766	0776	UD	02	1C8F	1C91
UDISK	00	127D	127D	WAIT01	00	1D3A	1D3A	WAIT1	05	1D50	1D55	WAIT	01	1D36	1D37	WAITZ	03	1D62	1D65
WARN0	22	0777	0799	WARN1	35	079A	07CF	WARNE	38	07D0	0808	WARNF	39	0809	0842	WARNS	36	0843	0879
WATT	01	1D38	1D39	ZERO2	02	199C	199E	ZERO	01	199A	199B	ZEROF	00	1BA9	1BA9				

```
02AE                        M     00001              STRT   686,4
0052                        M     00002              ORG    82
0052                              00003 LETT         DS     L160
00F2  00                          00004 DEP1         DC     XL1'00'
00F3  64                          00005 TEMUC        DC     XL1'64'
00F4  0000                        00006 UNITA        DC     XL2'0000'
00F6  02 80                       00007 ALTPRI       LON
00F8  0A 00                       00008              HLT
00FA  02 40                       00009              LOFF
00FC  43 F0 0000                  00010 HLT9         JU     0

0100                              00012 PRINT        DS     L116
0174                              00013 LF           DS     L20
0188                              00014 JUMP         DS     L120
0200                              00015 PRINT0       DS     L2
0202                              00016 CHRTS        DS     L160
02A2  0A 00                       00017 HLT          HLT
02A4  43 F0 00FC                  00018 HLT1         JU     252
02A8                              00019 READER       DS     L2
02AA                              00020 UDISC1       DS     L1
02AB                              00021 UDISC2       DS     L1
02AC                              00022 DEPINT       DS     L1
0B8C                              00023              RORG
0B8C                              00024 DEP0         DS     L1
0B8D                              00025 UN           DS     L8
0B95                              00026 U1           DS     L7
0B9C                              00027 NCHRTS       DS     L2
0B9E  0A 00                       00028 NOPRI        HLT
0BA0  43 F0 10E4                  00029              JU     NAPRI
0BA4  B4A559B351AF5059            00030 UNSEI        DC     CL22'UNITA'' IN AUTOMATICO :'
      A55051B4B3A6A451    B35953A6504D

0BBA  B4A559B351AF5056            00031 UNSAI        DC     CL23'UNITA'' FUORI SERVIZIO !'
```

```
        B4A6A95950B255A9   B559B959A6504D

0BD1    B4A559B3B25059A5          00032 UNSEE      DC     CL20'UNITS IN AUTOMATIC :'
        5051B4B3A6A451B3   5953504D

0BE5    B4A559B3B250A6B4          00033 UNSAE      DC     CL22'UNITS OUT OF SERVICE :'
        B350A65650B255A9   B5595355504D

0BFB    B4A559B355B25055          00034 UNSEF      DC     CL21'UNITES EN AUTOMATIC :'
        A55051B4B3A6A451   B35953504D

0C10    B4A559B355B25058          00035 UNSAF      DC     CL24'UNITES HORS DE SERVICE :'
        A6A9B25054555 0B2  55A9B5595355504D

0C28    4040BB                    00036 NA         DC     CL3'00,'
0C2B    5050505050505050          00037 NE         DC     CL40' '
        5050505050505050   5050505050505050   5050505050505050   5050505050505050

0C53    5050505050505050          00038 NF         DC     CL40' '
        5050505050505050   5050505050505050   5050505050505050   5050505050505050

0C7B    4040                      00039 SERV       DC     XL2'4040'
0C7D    02                        00040 PARAM1     DC     XL1'02'
0C7E    01                        00041 PIU1       DC     XL1'01'
0C7F    F8                        00042 DEP7       DC     XL1'F8'
0C80    07                        00043 SI         DC     XL1'07'
0C81    0B95                      00044 ALU1       DC     AL2(U1)
0C83    0B8E                      00045 ALUN       DC     AL2(UN+1)
0C85    C414                      00046 MARE       DC     XL2'C414'
0C87    C42E                      00047 SECO       DC     XL2'C42E'
                                  00048            ENTRY  PRINT,JUMP,LF,CHRTS,ALTPRI,READER,START,UN,U1
                                  00049            ENTRY  DEPINT,UDISC1,UDISC2,LETT,TEMUC
```

```
                                00050          ENTRY  HLT
0C89  54B2B25041454750          00051 DS161    DC     CL25'DSS 157  MARGINING  TEST'
      50A451A95759A559   A5575050B355B2B3   50

0CA2  B25659A351A95550          00052 OPEI     DC     CL30'SFILARE PIASTRA A20 SU GUD 040'
      A75951B2B3A95150   51424050B2B45057   B45450404440

0CC0  A7A6A9A95550B3B4          00053          DC     CL37'PORRE TUTTE LE UNITA''DISCO IN FUORI '
      B3B35550A35550B4   A559B351AF5459B2   53A65059A55056B4   A6A9595050

0CE5  B255A9B559B959A6          00054          DC     CL08'SERVIZIO'.
0CED                            00055          DC     CL64'MONTARE DISCO IMMATRICOLATO SULLE UNITA'''C
      A4A6A5B351A95550          00056                 !.NON USARE CE DISCPACK!'
      5459B253A65059A4   A451B3A95953A6A3   51B3A650B2B4A3A3   5550B4A559B351AF   5BA5A6A550B4B251
      A955505355505459   B253A75153A2BF50

0D2D  A7A955A455A95550          00057          DC     CL20'PREMERE START SU CPU'
      B2B351A9B350B2B4   5053A7B4

0D41  B351A25550A65656          00058 OPEE     DC     CL29'TAKE OFF BOARD A20 ON GUD 040'
      5052A651A9545051   424050A6A55057B4   5450404440

0D5E  B255B350A6565650          00059          DC     CL26'SET OFF ALL THE DISK UNITS'
      51A3A350B3585550   5459B2A250B4A559   B3B2

0D78  A3A6515450A6A550          00060          DC     CL38'LOAD ON THE UNITS AN INIZIALIZED DISC '
      B3585550B4A559B3   B25051A55059A559   B95951A359B95554   505459B25350

0D9E  50AA54A6A5AFB350          00061          DC     CL23' -DON''T USE CE DISCPACK'
      B4B255505355054    59B253A75153A2

0DB5  A7B4B2585 0B2B351         00062          DC     CL24'PUSH START BUTTON ON CPU'
      A9B35052B4B3B3A6   A550A6A55053A7B4
```

```
0DCD  54555659A355A950          00063 OPEF      DC     CL33'DEFILER LA PLAQUE A20 SUR GUD 040'
      A35150A7A351A8B4   555051424050B2B4   A95057B454504044   40

0DEE                            00064           DC     CL45'PLACER HORS SERVICE TOUTES LES UNITEES '  C
      A7A3515355A95058          00065                  'DISQUE'
      A6A9B250B255A9B5   59535550B3A6B4B3   55B250A355B250B4   A559B35555B25054   59B2A8B455

0E1B                            00066           DC     CL76'PLACER SUR LES UNITEES CHOISIES UN DISQUE'C
      A7A3515355A950B2          00067                  ' PREMARQUE'',NE PAS USER CE DISCPACK'
      B4A950A355B250B4   A559B35555B25053   58A659B25955B250   B4A5505459B2A8B4   5550A7A955A451A9
      A8B455AF5BA55550   A751B250B4B255A9   505355505459B253   A75153A2

0E67  A7A955B2B255A950          00068           DC     CL37'PRESSER "START" SUR LA CONSOLE DU CPU'
      BEB2B351A9B3BE50   B2B4A950A3515053   A6A5B2A6A3555054   B45053A7B4

0E8C                            00069           DS     L3
0E8F  41AD50                    00070 NUMERO    DC     CL3'1)'
0E92  42AD50                    00071           DC     CL3'2)'
0E95  43AD50                    00072           DC     CL3'3)'
0E98  44AD50                    00073           DC     CL3'4)'
0E9B  45AD50                    00074           DC     CL3'5)'
0E9E  46AD50                    00075           DC     CL3'6)'
0EA1                            00076 NADISC    DC     CL44'PORRE IN AUTOMATICO LE UNITA'' DISCO IN'  C
      A7A6A9A9555059A5          00077                  ' PROVA'
      5051B4B3A6A451B3   5953A650A35550B4   A559B351AF505459   B253A65059A550A7   A9A6B551

0ECD  B255B35059A55051          00078           DC     CL33'SET IN AUTOMATIC THE CHOSEN DSU''S'
      B4B3A6A451B35953   50B358555050358A6   B255A55054B2B4AF   B2

0EEE                            00079           DC     CL44'PLACER EN SERVICE LES UNITES DISQUE CHOIS'C
      A7A3515355A95055          00080                  'IES'
      A550B255A9B55953   5550A355B250B4A5   59B355B2505459B2   A8B455505358A659   B25955B2
```

```
0F1A  59A350A5A6A45550          00081 NIDISC     DC     CL39'IL NOME DELLA PRIMA UNITA'' DISCO E'''
      5455A3A35150A7A9   59A45150B4A559B3   51AF505459B253A6   5055AF50505050

0F41  B3585550A551A455          00082            DC     CL36'THE NAME OF THE FIRST DSU IS'
      50A65650B3585550   5659A9B2B35054B2   B45059B250505050   50505050

0F65  A35550A5A6A45054          00083            DC     CL40'LE NOM DE LA PREMIERE UNITE'' DISQUE EST '
      5550A35150A7A955   A45955A95550B4A5   59B355AF505459B2   A8B4555055B2B350

0F8D  53A6A5B3A9A6A3A3          00084 SERVII     DC     CL39'CONTROLLARE  STAMPE; SE ESATTE PREMERE '
      51A9555050B2B351   A4A755AE50B25550   55B251B3B35550A7   A955A455A95550

0FB4  B2B351A9B3BB51A3          00085            DC     CL37'START,ALTRIMENTI INSERENDO SWITCH2 E '
      B3A959A455A5B359   5059A5B255A955A5   54A650B2B659B353   5842505550

0FD9  A7A955A455A554A6          00086            DC     CL38'PREMENDO START SI RIPETE ESECUZIONE.'
      50B2B351A9B350B2   5950A959A755B355   5055B25553B4B959   A6A5555B5050

0FFF                            00087 SERVIE     DC     CL44'CHECK PRINTOUT; IF IT IS CORRECT PRESS '  C
      53585553A250A7A9          00088                   'START'
      59A5B3A6B4B3AE50   59565059B35059B2   5053A6A9A95553B3   50A7A955B2B250B2   B351A9B3

102B                            00089            DC     CL59'OTHERWISE THE PROGRAM IS RERUN '          C
      A6B35855A9B659B2          00090                   'PRESSING SWITCH2 AND START '
      5550B3585550A7A9   A657A951A45059B2   50A955A9B4A550A7   A955B2B259A55750   B2B659B353584250
      51A55450B2B351A9   B35050

1066                            00091 SERVIF     DC     CL59'CONTROLER LES IMPRIMERIES;SI IL SONT '    C
      53A6A5B3A9A6A355          00092                   'EXACT PRESSER "START";'
      A950A355B25059A4   A7A959A455A95955   B2AEB2595059A350   B2A6A5B35055B751   53B350A7A955B2B2
      55A950BEB2B351A9   B3BEAE

10A1                            00093            DC     CL60'AUTREMENT POUR REPETER LE PROGRAM,PRESSER'C
```

```
51B4B3A955A455A5          00094                    '"SWITCH2"ET "START"'
B350A7A6B4A950A9   55A755B355A950A3   5550A7A9A657A951   A4BBA7A955B2B255   A9BEB2B659B35358
42BE55B350BEB2B3   51A9B3BE

10DE  D2 00 02A9 0005  P  00095 START    MVC    READER+1(1),0005
                          00096          *      PRINTER   NAME  SEARCH
10E4  02 80               00097 NAPRI    LON
                          00098          *UNIT  NCHRTS,TEMUC
10E6  41 F0 02AE                         JRT    YUNIT
10EA  0B9C                               DC     AL2(NCHRTS)
10EC  00F3                               DC     AL2(TEMUC)
10EE  43 F0 0B9E          00099          JU     NOPRI
10F2  02 40               00100          LOFF
                          00101          *      CHRTS  SUBROUTINE  GENERATION
                          00102          *TYPRA NCHRTS,PRINTO,ALTPRI
10F4  41 F0 0482                         JRT    YTYPRA
10F8  0B9C                               DC     AL2(NCHRTS)
10FA  0200                               DC     AL2(PRINTO)
10FC  00F6                               DC     AL2(ALTPRI)
10FE  D2 18 021B 0C89     00103 TITOLO   MVC    CHRTS+25(25),DS161     TITLE PROGRAM  CHRTS
1104  41 F0 0100          00104          JRT    PRINT
1108  D2 00 02AC 01F8     00105          MVC    DEPINT,PRINTO-8
110E  92 0A 01F8          00106          MVI    X'0A',PRINTO-8
1112  41 F0 0188          00107          JRT    JUMP                    5  LF
                          00108          *      REQUIRED OPERATIONS CHRTS
1116  D2 02 020C 0E8F     00109 OPPRI    MVC    CHRTS+10(3),NUMERO          1)   IT.
111C  D2 1D 0210 0CA2     00110          MVC    CHRTS+14(30),OPEI
1122  41 F0 0100          00111          JRT    PRINT
                          00112          *                                  2)
1126  D2 02 020C 0E92     00113          MVC    CHRTS+10(3),NUMERO+3
112C  D2 2C 0210 0CC0     00114          MVC    CHRTS+14(45),OPEI+30
1132  41 F0 0100          00115          JRT    PRINT
```

```
1136  D2 02 020C 0E95   00116   MVC   CHRTS+10(3),NUMERO+6      3)
113C  D2 3F 0210 0CED   00117   MVC   CHRTS+14(64),OPEI+75
1142  41 F0 0100        00118   JRT   PRINT
1146  D2 02 020C 0E98   00119   MVC   CHRTS+10(3),NUMERO+9      4)
114C  D2 13 0210 0D2D   00120   MVC   CHRTS+14(20),OPEI+139
1152  41 F0 0100        00121   JRT   PRINT
1156  41 F0 0188        00122   JRT   JUMP
115A  D2 02 020C 0E8F   00123   MVC   CHRTS+10(3),NUMERO        1) EN.
1160  D2 1C 0210 0D41   00124   MVC   CHRTS+14(29),OPEE
1166  41 F0 0100        00125   JRT   PRINT
116A  D2 02 020C 0E92   00126   MVC   CHRTS+10(3),NUMERO+3      2)
1170  D2 19 0210 0D5E   00127   MVC   CHRTS+14(26),OPEE+29
1176  41 F0 0100        00128   JRT   PRINT
117A  D2 02 020C 0E95   00129   MVC   CHRTS+10(3),NUMERO+6      3)
1180  D2 3C 0210 0D78   00130   MVC   CHRTS+14(61),OPEE+55
1186  41 F0 0100        00131   JRT   PRINT
118A  D2 02 020C 0E98   00132   MVC   CHRTS+10(3),NUMERO+9      4)
1190  D2 17 0210 0DB5   00133   MVC   CHRTS+14(24),OPEE+116
1196  41 F0 0100        00134   JRT   PRINT
119A  41 F0 0188        00135   JRT   JUMP
119E  D2 01 020C 0E8F   00136   MVC   CHRTS+10(2),NUMERO        1)  FR.
11A4  D2 20 0210 0DCD   00137   MVC   CHRTS+14(33),OPEF
11AA  41 F0 0100        00138   JRT   PRINT
11AE  D2 01 020C 0E92   00139   MVC   CHRTS+10(2),NUMERO+3      2)
11B4  D2 2C 0210 0DEE   00140   MVC   CHRTS+14(45),OPEF+33
11BA  41 F0 0100        00141   JRT   PRINT
11BE  D2 01 020C 0E95   00142   MVC   CHRTS+10(2),NUMERO+6      3)
11C4  D2 4B 0210 0E1B   00143   MVC   CHRTS+14(76),OPEF+78
11CA  41 F0 0100        00144   JRT   PRINT
11CE  D2 01 020C 0E98   00145   MVC   CHRTS+10(2),NUMERO+9      4)
11D4  D2 24 0210 0E67   00146   MVC   CHRTS+14(37),OPEF+154
11DA  41 F0 0100        00147   JRT   PRINT
11DE  D2 00 01F8 02AC   00148   MVC   PRINTO-8(1),DEPINT
11E4  41 F0 0188        00149   JRT   JUMP                          EJECT
```

```
11E8  0A 00                    00150          HLT                HLT. SEE PRINTOUT
                               00151          *      CHRTS : FIRST DISC UNIT  IN OPERATE
11EA  D2 2B 020C 0EA1          00152          MVC    CHRTS+10(44),NADISC
11F0  41 F0 0100               00153          JRT    PRINT
11F4  D2 20 020C 0ECD          00154          MVC    CHRTS+10(33),NADISC+44
11FA  41 F0 0100               00155          JRT    PRINT
11FE  D2 2B 020C 0EEE          00156          MVC    CHRTS+10(44),NADISC+77
1204  D2 00 0B8D 02AA          00157          MVC    UN(1),UDISC1
120A  41 F0 0100               00158          JRT    PRINT
120E  41 F0 0188               00159          JRT    JUMP                          EJECT
                               00160          *       FIRST DISC UNIT NAME SEARCH
1212  02 80                    00161          LON
1214  92 00 1560               00162          MVI    X'00',U
                               00163          *UNIT  UNITA,TEMUC
1218  41 F0 02AE                              JRT    YUNIT
121C  00F4                                    DC     AL2(UNITA)
121E  00F3                                    DC     AL2(TEMUC)
1220  43 F0 154A               00164          JU     NODIS1
1224  02 40                    00165 RIDIS    LOFF
1226  92 40 0C7B               00166          MVI    X'40',SERV
122A  92 40 0C7C               00167          MVI    X'40',SERV+1
122E  D8 00 0C7B 00F5          00168          UPK    SERV(1),UNITA+1
1234  DA 00 02AA 0C7B          00169          PK     UDISC1(1),SERV
123A  D2 01 0245 0C7B          00170          MVC    CHRTS+67(2),SERV        FIRST UNIT NAME CHRTS
1240  D2 26 021B 0F1A          00171          MVC    CHRTS+25(39),NIDISC
1246  41 F0 0100               00172          JRT    PRINT
124A  D2 01 0245 0C7B          00173          MVC    CHRTS+67(2),SERV
1250  D2 23 021B 0F41          00174          MVC    CHRTS+25(36),NIDISC+39
1256  41 F0 0100               00175          JRT    PRINT
125A  D2 01 0245 0C7B          00176          MVC    CHRTS+67(2),SERV
1260  D2 27 021B 0F65          00177          MVC    CHRTS+25(40),NIDISC+75
1266  41 F0 0100               00178          JRT    PRINT
```

```
126A  41 F0 0188                00179          JRT    JUMP                    5LF
126E  95 FF 1560                00180          CMI    X'FF',U
1272  43 20 1280                00181          JE     *+14
1276  02 80                     00182          LON
1278  92 27 1526                00183          MVI    X'27',WAITA
127C  92 00 1527                00184          MVI    X'00',WAITA+1
1280  41 F0 152A                00185          JRT    SUBWAI
1284  02 40                     00186          LOFF
1286  D2 00 12C7 02AA           00187          MVC    MA+1(1),UDISC1
128C  D2 00 0B8D 02AA           00188          MVC    UN(1),UDISC1
1292  D4 00 12C7 0C7F           00189          NC     MA+1(1),DEP7
1298  92 09 0C80                00190          MVI    X'09',SI
129C  D2 01 12DE 0C83           00191          MVC    NI+2(2),ALUN
12A2  D2 01 12F4 0C81           00192          MVC    INEX+2(2),ALU1
12A8  92 FF 0B8E                00193          MVI    X'FF',UN+1
12AC  D2 0C 0B8F 0B8E           00194          MVC    UN+2(13),UN+1
12B2  FF 00 0C80 0C7E           00195 MI       SB     SI,PIU1
12B8  43 20 1308                00196          JE     G05
12BC  D5 00 12C7 0B8D           00197          CMC    MA+1(1),UN
12C2  43 20 12E8                00198          JE     MO
12C6  9E 00 0C85                00199 MA       PER    0,MARE
12CA  43 10 12F2                00200          JG     INEX
12CE  D2 00 12D5 12C7           00201          MVC    SE+1(1),MA+1
12D4  9E 00 0C87                00202 SE       PER    0,SECO
12D8  43 10 12F2                00203          JG     INEX
12DC  D2 00 0000 12C7           00204 NI       MVC    0(1),MA+1
12E2  FE 10 12DF 0C7E           00205          AB     NI-2(2),PIU1
12E8  FE 00 12C7 0C7E           00206 MO       AB     MA-2(1),PIU1(1)
12EE  43 F0 12B2                00207          JU     MI
12F2  D2 00 0000 12C7           00208 INEX     MVC    0(1),MA+1
12F8  FE 10 12F5 0C7E           00209          AB     INEX-2(2),PIU1(1)
12FE  FE 00 12C7 0C7E           00210          AB     MA-2(1),PIU1(1)
1304  43 F0 12B2                00211          JU     MI
1308  92 50 0C28                00212 005      MVI    X'50',NE
```

```
130C  D2 4E 0C2C 0C2B      00213        MVC   NE+1(79),NE
1312  D2 02 0C2B 0C28      00214        MVC   NE(3),NA
1318  D8 00 0C2B 0B8D      00215        UPK   NE(1),UN
131E  95 FF 0B8E           00216        CMI   X'FF',UN+1
1322  43 20 13AA           00217        JE    G01
1326  D2 02 0C30 0C28      00218        MVC   NE+05(3),NA
132C  D8 00 0C30 0B8E      00219        UPK   NE+05(1),UN+1
1332  95 FF 0B8F           00220        CMI   X'FF',UN+2
1336  43 20 13AA           00221        JE    G01
133A  D2 02 0C35 0C28      00222        MVC   NE+10(3),NA
1340  D8 00 0C35 0B8F      00223        UPK   NE+10(1),UN+2
1346  95 FF 0B90           00224        CMI   X'FF',UN+3
134A  43 20 13AA           00225        JE    G01
134E  D2 02 0C3A 0C28      00226        MVC   NE+15(3),NA
1354  D8 00 0C3A 0B90      00227        UPK   NE+15(1),UN+3
135A  95 FF 0B91           00228        CMI   X'FF',UN+4
135E  43 20 13AA           00229        JE    G01
1362  D2 02 0C3F 0C28      00230        MVC   NE+20(3),NA
1368  D8 00 0C3F 0B91      00231        UPK   NE+20(1),UN+4
136E  95 FF 0B92           00232        CMI   X'FF',UN+5
1372  43 20 13AA           00233        JE    G01
1376  D2 02 0C44 0C28      00234        MVC   NE+25(3),NA
137C  D8 00 0C44 0B92      00235        UPK   NE+25(1),UN+5
1382  95 FF 0B93           00236        CMI   X'FF',UN+6
1386  43 20 13AA           00237        JE    G01
138A  D2 02 0C49 0C28      00238        MVC   NE+30(3),NA
1390  D8 00 0C49 0B93      00239        UPK   NE+30(1),UN+6
1396  95 FF 0B94           00240        CMI   X'FF',UN+7
139A  43 20 13AA           00241        JE    G01
139E  D2 02 0C4E 0C28      00242        MVC   NE+35(3),NA
13A4  D8 00 0C4E 0B94      00243        UPK   NE+35(1),UN+7
13AA  95 FF 0B95           00244 G01    CMI   X'FF',U1
```

```
13AE  43 20 1436                00245          JE     G02
13B2  D2 02 0C53 0C28           00246          MVC    NF+00(3),NA
13B8  D8 00 0C53 0B95           00247          UPK    NF+00(1),U1+00
13BE  95 FF 0B96                00248          CMI    X'FF',U1+1
13C2  43 20 1436                00249          JE     G02
13C6  D2 02 0C58 0C28           00250          MVC    NF+05(3),NA
13CC  D8 00 0C58 0B96           00251          UPK    NF+05(1),U1+1
13D2  95 FF 0B97                00252          CMI    X'FF',U1+2
13D6  43 20 1436                00253          JE     G02
13DA  D2 02 0C5D 0C28           00254          MVC    NF+10(3),NA
13E0  D8 00 0C5D 0B97           00255          UPK    NF+10(1),U1+2
13E6  95 FF 0B98                00256          CMI    X'FF',U1+3
13EA  43 20 1436                00257          JE     G02
13EE  D2 02 0C62 0C28           00258          MVC    NF+15(3),NA
13F4  D8 00 0C62 0B98           00259          UPK    NF+15(1),U1+3
13FA  95 FF 0B99                00260          CMI    X'FF',U1+4
13FE  43 20 1436                00261          JE     G02
1402  D2 02 0C67 0C28           00262          MVC    NF+20(3),NA
1408  D8 00 0C67 0B99           00263          UPK    NF+20(1),U1+4
140E  95 FF 0B9A                00264          CMI    X'FF',U1+5
1412  43 20 1436                00265          JE     G02
1416  D2 02 0C6C 0C28           00266          MVC    NF+25(3),NA
141C  D8 00 0C6C 0B9A           00267          UPK    NF+25(1),U1+5
1422  95 FF 0B9B                00268          CMI    X'FF',U1+6
1426  43 20 1436                00269          JE     G02
142A  D2 02 0C71 0C28           00270          MVC    NF+30(3),NA
1430  D8 00 0C71 0B9B           00271          UPK    NF+30(1),U1+6
1436  D2 15 020C 0BA4           00272 G02      MVC    CHRTS+10(22),UNSEI
143C  D2 27 022A 0C2B           00273          MVC    CHRTS+40(40),NE
1442  41 F0 0100                00274          JRT    PRINT
1446  D2 16 020C 0BBA           00275          MVC    CHRTS+10(23),UNSAI
144C  D2 27 022A 0C53           00276          MVC    CHRTS+40(40),NF
1452  41 F0 0100                00277          JRT    PRINT
1456  D2 00 02AC 01F8           00278 LF05     MVC    DEPINT(1),PRINTO-8
```

```
145C  92 0A 01F8          00279    MVI   X'0A',PRINTO-8
1460  41 F0 0188          00280    JRT   JUMP
1464  D2 13 020C 0BD1     00281    MVC   CHRTS+10(20),UNSEE
146A  D2 27 022A 0C2B     00282    MVC   CHRTS+40(40),NE
1470  41 F0 0100          00283    JRT   PRINT
1474  D2 15 020C 0BE5     00284    MVC   CHRTS+10(22),UNSAE
147A  D2 27 022A 0C53     00285    MVC   CHRTS+40(40),NF
1480  41 F0 0100          00286    JRT   PRINT
1484  41 F0 0188          00287    JRT   JUMP
1488  D2 14 020C 0BFB     00288    MVC   CHRTS+10(21),UNSEF
148E  D2 27 022A 0C2B     00289    MVC   CHRTS+40(40),NE
1494  41 F0 0100          00290    JRT   PRINT
1498  D2 17 020C 0C10     00291    MVC   CHRTS+10(24),UNSAF
149E  D2 27 022A 0C53     00292    MVC   CHRTS+40(40),NF
14A4  41 F0 0100          00293    JRT   PRINT
14A8  41 F0 0188          00294    JRT   JUMP
14AC  41 F0 0188          00295    JRT   JUMP
                          00296    *     FINAL CHRTS
14B0  D2 2C 020C 0F8D     00297    MVC   CHRTS+10(45),SERVII                    IT.
14B6  41 F0 0100          00298    JRT   PRINT
14BA  D2 44 020C 0FBA     00299    MVC   CHRTS+10(69),SERVII+45
14C0  41 F0 0100          00300    JRT   PRINT
14C4  41 F0 0188          00301    JRT   JUMP
14C8  D2 2B 020C 0FFF     00302    MVC   CHRTS+10(44),SERVIE                    EN.
14CE  41 F0 0100          00303    JRT   PRINT
14D2  D2 3A 020C 102B     00304    MVC   CHRTS+10(59),SERVIE+44
14D8  41 F0 0100          00305    JRT   PRINT
14DC  41 F0 0188          00306    JRT   JUMP
14E0  D2 3A 020C 1066     00307    MVC   CHRTS+10(59),SERVIF                    FR.
14E6  41 F0 0100          00308    JRT   PRINT
14EA  D2 3B 020C 10A1     00309    MVC   CHRTS+10(60),SERVIF+59
14F0  41 F0 0100          00310    JRT   PRINT
```

```
14F4  D2 00 01F8 02AC
14FA  41 F0 0188
14FE  0A 00
1500  D2 00 02AC 01F8
1506  92 0A 01F8
150A  53 40 1116
150E  D2 00 01F8 02AC
1514  D2 01 02AA 0B8D
151A  92 00 001E
151E  92 04 001F
1522  43 F0 0000

1526
1528  01
1529  E2
152A  D2 01 1548 00FE
1530  D2 00 1537 1529
1536  D2 00 0000 0000
153C  FF 10 1527 1528
1542  43 10 152A
1546  43 F0 0000
154A  02 40

154C  41 F0 07A8
1550  0100
1552  0188
1554  0202
1556  00F5
1558  92 FF 1560
155C  43 F0 1224
1560
001E                    M
001E  10DE
0020
```

```
00311          MVC    PRINTO-8(1),DEPINT
00312          JRT    JUMP
00313          HLT                                SEE  PRINTOUT
00314          MVC    DEPINT(1),PRINTO-8
00315          MVI    X'0A',PRINTO-8
00316          JS2    OPPRI
00317          MVC    PRINTO-8(1),DEPINT
00318          MVC    UDISC1(2),UN
00319          MVI    X'00',30
00320          MVI    X'04',31
00321          JU     000
00322          *      SUBWAIT SUBROUTINE
00323 WAITA    DS     L2
00324 WAIT01   DC     XL1'01'
00325 TEM      DC     XL1'E2'
00326 SUBWAI   MVC    WAITZ+2(2),254
00327          MVC    WAIT1+1(1),TEM
00328 WAIT1    MVC    0000(01),0000
00329          SB     WAITA(2),WAIT01(1)
00330          JG     SUBWAI
00331 WAITZ    JU     0000
00332 NODIS1   LOFF
00333          *MUNI  PRINT,JUMP,CHRTS,UNITA+1
               JRT    YMUNI
               DC     AL2(PRINT)
               DC     AL2(JUMP)
               DC     AL2(CHRTS)
               DC     AL2(UNITA+1)
00334          MVI    X'FF',U
00335          JU     RIDIS
00336 U        DS     L1
00337          ORG    30
00338          DC     AL2(START)
00339          ESGM
```

```
02AE                        M      00340              ORG    DEPINT+2
04B8                               00341 ENTRA       DS     4L144
06F8                               00342 ESCE        DS     L110
0766  4041424344454647             00343 TRASCO      DC     CL17'0123456789ABCDEF '
      4849515253545556      50

0777  51B3B355A5B959A6             00344 WARN0       DC     CL35'ATTENZIONE!-WARNING!-ATTENTION!'
      A555BFAAB651A9A5      59A557BFAA51B3B3   55A5B359A6A5BF50   505050

079A                               00345 WARN1       DC     CL54'IN ASSENZA DI SK. PARAMETRO  OGNI'        C
      59A55051B2B255A5             00346                     ' PROVA SARA'' ESEGUITA'
      B95150545950B2A2      5B50A751A951A455   B3A9A65050A657A5   5950A7A9A6B55150   B251A951AF5055B2
      5557B459B351

07D0                               00347 WARNE       DC     CL57'IN ABSENCE OF PARAMETER CARD  EVERY'      C
      59A5505152B255A5             00348                     ' TEST WILL BE EXECUTED'
      535550A65650A751      A951A455B355A950   5351A95450505 5B5   55A9B850B355B2B3   50B659A3A3505255
      5055B75553B4B355      54

0809                               00349 WARNF       DC     CL58'EN L'' ABSENCE DE CARTE PARAMETRE '       C
      55A550A3AF505152             00350                     ' CHAQUE TEST SERA EXECUTE'
      B255A55355505455      505351A9B35550A7   51A951A455B3A955   5050535851A8B455   50B355B2B350B255
      A9515055B75553B4      B355

0843                               00351 WARNS       DC     CL55'PREMERE ''''START'''' - PRESS ''''STA'    C
      A7A955A455A95550             00352                     'RT'''' - PRESSER ''''START'''''
      AFAFB2B351A9B3AF      AF50AA50A7A955B2   B250AFAFB2B351A9   B3AFAF50AA50A7A9   55B2B255A950AFAF
      B2B351A9B3AFAF
```

```
                                  00354          *      STARTING SEQUENCE

087A  D2 22 0215 0777             00356 START2   MVC    CHRTS+19(35),WARN0
0880  41 F0 0100                  00357          JRT    PRINT
0884  41 F0 1CC8                  00358          JRT    ALARM
0888  D2 35 020A 079A             00359          MVC    CHRTS+8(54),WARN1
088E  41 F0 0100                  00360          JRT    PRINT
0892  D2 38 020A 07D0             00361          MVC    CHRTS+8(57),WARNE
0898  41 F0 0100                  00362          JRT    PRINT
089C  D2 39 020A 0809             00363          MVC    CHRTS+8(58),WARNF
08A2  41 F0 0100                  00364          JRT    PRINT
08A6  41 F0 0100                  00365          JRT    PRINT
08AA  D2 36 020C 0843             00366          MVC    CHRTS+10(55),WARNS
08B0  41 F0 0100                  00367          JRT    PRINT
08B4  41 F0 0188                  00368          JRT    JUMP
08B8  0A 00                       00369 TOP110   HLT
08BA  D2 10 0040 0766             00370          MVC    0064(17),TRASCO
08C0  41 F0 1C92                  00371          JRT    COMPER
08C4  091E                        00372          DC     AL2(TOP)
08C6  127D                        00373          DC     AL2(UDISK)
08C8  129D                        00374          DC     AL2(POVE50+1)
08CA  12A5                        00375          DC     AL2(POVE51+1)
08CC  1459                        00376          DC     AL2(REHOME+19)
08CE  145D                        00377          DC     AL2(REHOME+23)
08D0  1465                        00378          DC     AL2(REHOME+31)
08D2  148B                        00379          DC     AL2(REHOM1+1)
08D4  1493                        00380          DC     AL2(REHOM1+9)
08D6  1285                        00381          DC     AL2(POVE49+1)
08D8  12A9                        00382          DC     AL2(POVE52+1)
08DA  153B                        00383          DC     AL2(REVE12+1)
08DC  1543                        00384          DC     AL2(REVE12+9)
08DE  154B                        00385          DC     AL2(REVE12+17)
08E0  15A9                        00386          DC     AL2(REVE75+1)
```

```
08E2  15B1                00387          DC     AL2(REVE75+9)
08E4  0D47                00388          DC     AL2(T14004+1)
08E6  0D4B                00389          DC     AL2(T14005+1)
08E8  15B9                00390          DC     AL2(REVE75+17)
08EA  15C5                00391          DC     AL2(REVE75+29)
08EC  17AD                00392          DC     AL2(ERCAPE+13)
08EE  17B9                00393          DC     AL2(ERCAPE+25)
08F0  1497                00394          DC     AL2(REHOM1+13)
08F2  14A1                00395          DC     AL2(REHOM1+23)
08F4  096D                00396          DC     AL2(TAIL+7)
08F6  1151                00397          DC     AL2(MODE4+1)
08F8  117D                00398          DC     AL2(MOD31+1)
08FA  11F9                00399          DC     AL2(MOD30+1)
08FC  1181                00400          DC     AL2(MODE34+1)
08FE  116B                00401          DC     AL2(MODE33+1)
0900  111F                00402          DC     AL2(MODE+1)
0902  1137                00403          DC     AL2(MOD01+1)
0904  113F                00404          DC     AL2(MODE2+1)
0906  1149                00405          DC     AL2(MODE3+1)
0908  115F                00406          DC     AL2(MODE44+1)
090A  118F                00407          DC     AL2(MODE5+1)
090C  11A1                00408          DC     AL2(MODE6+1)
090E  11A9                00409          DC     AL2(MODE7+1)
0910  11B3                00410          DC     AL2(MODE8+1)
0912  11BB                00411          DC     AL2(MODE9+1)
0914  11C5                00412          DC     AL2(MODE10+1)
0916  11CD                00413          DC     AL2(MODE11+1)
0918  11DB                00414          DC     AL2(MODE12+1)
091A  11E7                00415          DC     AL2(MOD112+1)
091C  11FD                00416          DC     AL2(MOD02+1)
091E  92 50 0052          00417 TOP      MVI    X'50',LETT
0922  D2 4E 0053 0052     00418          MVC    LETT+1(79),LETT
```

```
0928  D2 00 092F 02A9          00419            MVC    TOP101+1(1),READER+1
092E  9E 00 19A8               00420 TOP101     PER    X'00',TOP001
0932  43 20 094A               00421            JE     TOP111
0936  D2 27 0052 1A4D          00422            MVC    LETT(40),TESTS
093C  43 F0 0958               00423            JU     TOP1
0940  02 80                    00424            LON
0942  0A 00                    00425            HLT
0944  02 40                    00426            LOFF
0946  43 F0 0AB6               00427            JU     TAIL20
                               00428 TOP111     *READB READER+1,LETT,PARAM2
094A  41 F0 02AE                     TOP111     JRT    YREADB
094E  02A9                                      DC     AL2(READER+1)
0950  0052                                      DC     AL2(LETT)
0952  19A0                                      DC     AL2(PARAM2)
0954  43 F0 0940               00429            JU     *-20
0958  92 50 00A2               00430 TOP1       MVI    X'50',LETT+80
095C  92 50 00A3               00431            MVI    X'50',LETT+81
0960  D2 01 097A 1A75          00432 TOP10      MVC    TAIL02+4(2),ALLETT
0966  02 40                    00433 TAIL       LOFF
0968  41 F0 1446               00434            JRT    REHOME
096C  9E 00 1A0F               00435            PER    X'00',RESET
0970  FE 10 097B 19A0          00436            AB     TAIL02(2),PARAM2(1)
0976  D2 01 1A4B 0000          00437 TAIL02     MVC    NTEST(2),0000
097C  D7 01 1B72 1B72          00438            XC     COL(2),COL
0982  D5 01 1A4D 1A4B          00439            CMC    TESTS+00(2),NTEST
0988  43 20 0B20               00440            JE     T01STR
098C  D5 01 1A4F 1A4B          00441            CMC    TESTS+02(2),NTEST
0992  43 20 0B28               00442            JE     T02STR
0996  D5 01 1A51 1A4B          00443            CMC    TESTS+04(2),NTEST
099C  43 20 0B30               00444            JE     T03STR
09A0  D5 01 1A53 1A4B          00445            CMC    TESTS+06(2),NTEST
09A6  43 20 0B38               00446            JE     T04STR
09AA  D5 01 1A55 1A4B          00447            CMC    TESTS+08(2),NTEST
09B0  43 20 0B40               00448            JE     T05STR
```

```
09B4  D5 01 1A57 1A4B   00449   CMC   TESTS+10(2),NTEST
09BA  43 20 0B48        00450   JE    T06STR
09BE  D5 01 1A59 1A4B   00451   CMC   TESTS+12(2),NTEST
09C4  43 20 0B50        00452   JE    T07STR
09C8  D5 01 1A5B 1A4B   00453   CMC   TESTS+14(2),NTEST
09CE  43 20 0B58        00454   JE    T08STR
09D2  D5 01 1A5D 1A4B   00455   CMC   TESTS+16(2),NTEST
09D8  43 20 0B60        00456   JE    T09STR
09DC  D5 01 1A5F 1A4B   00457   CMC   TESTS+18(2),NTEST
09E2  43 20 0BCC        00458   JE    T10STR
09E6  D5 01 1A61 1A4B   00459   CMC   TESTS+20(2),NTEST
09EC  43 20 0C14        00460   JE    T11STR
09F0  D5 01 1A63 1A4B   00461   CMC   TESTS+22(2),NTEST
09F6  43 20 0C62        00462   JE    T12STR
09FA  D5 01 1A65 1A4B   00463   CMC   TESTS+24(2),NTEST
0A00  43 20 0CBE        00464   JE    T13STR
0A04  D5 01 1A67 1A4B   00465   CMC   TESTS+26(2),NTEST
0A0A  43 20 0D02        00466   JE    T14STR
0A0E  D5 01 1A69 1A4B   00467   CMC   TESTS+28(2),NTEST
0A14  43 20 0DA8        00468   JE    T15STR
0A18  D5 01 1A6B 1A4B   00469   CMC   TESTS+30(2),NTEST
0A1E  43 20 0DD6        00470   JE    T16STR
0A22  D5 01 1A6D 1A4B   00471   CMC   TESTS+32(2),NTEST
0A28  43 20 0E32        00472   JE    T17STR
0A2C  D5 01 1A6F 1A4B   00473   CMC   TESTS+34(2),NTEST
0A32  43 20 0F80        00474   JE    T18STR
0A36  D5 01 1A71 1A4B   00475   CMC   TESTS+36(2),NTEST
0A3C  43 20 111E        00476   JE    MODE
0A40  53 40 0960        00477   JS2   TOP10
0A44  D2 46 0202 1D68   00478   MVC   CHRTS(71),TAILOA
0A4A  41 F0 0100        00479   JRT   PRINT
0A4E  D2 46 0202 1DAF   00480   MVC   CHRTS(71),TAILOB
```

```
0A54  41 F0 0100                 00481          JRT    PRINT
0A58  D2 34 0202 1DF6            00482          MVC    CHRTS(53),TAILOC
0A5E  41 F0 0100                 00483          JRT    PRINT
0A62  41 F0 0100                 00484          JRT    PRINT
0A66  D2 3E 0202 1E2B            00485          MVC    CHRTS(63),TAILOD
0A6C  41 F0 0100                 00486          JRT    PRINT
0A70  D2 36 0202 1E6A            00487          MVC    CHRTS(55),TAILOE
0A76  41 F0 0100                 00488          JRT    PRINT
0A7A  D2 30 0202 1EA1            00489          MVC    CHRTS(49),TAILOF
0A80  41 F0 0100                 00490          JRT    PRINT
0A84  41 F0 0100                 00491          JRT    PRINT
0A88  D2 45 0202 1ED2            00492          MVC    CHRTS(70),TAILOG
0A8E  41 F0 0100                 00493          JRT    PRINT
0A92  D2 41 0202 1F18            00494          MVC    CHRTS(66),TAILOH
0A98  41 F0 0100                 00495          JRT    PRINT
0A9C  D2 40 0202 1F5A            00496          MVC    CHRTS(65),TAILOI
0AA2  41 F0 0100                 00497          JRT    PRINT
0AA6  41 F0 0188                 00498          JRT    JUMP
0AAA  0A 00                      00499 FINE     HLT
0AAC  53 40 0960                 00500          JS2    TOP10
0AB0  D2 00 0AB7 02A9            00501          MVC    TAIL20+1(1),READER+1
0AB6  9E 00 19A8                 00502 TAIL20   PER    X'00',TOP001
0ABA  43 20 094A                 00503          JE     TOP111
0ABE  02 80                      00504          LON
0AC0  0A 00                      00505          HLT
0AC2  02 40                      00506          LOFF
0AC4  43 F0 0AB6                 00507          JU     TAIL20
```

```
                                  00509          *      REPEATED SEEKS ROUTINE

0AC8  92 00 1A82                  00511 CATEP0     MVI    X'00',T00S00
0ACC  D2 01 0AD6 00FE             00512            MVC    CATEP1+4(2),254
0AD2  D2 03 1A83 0000             00513 CATEP1     MVC    CATEPS(4),0000
0AD8  D2 01 0AFC 1A83             00514            MVC    CATEP4+18(2),CATEPS
0ADE  D2 00 0AEF 1A86             00515            MVC    CATEP4+5(1),CATEPS+3
0AE4  D2 00 0AF0 1A86             00516            MVC    CATEP4+6(1),CATEPS+3
0AEA  41 F0 1248                  00517 CATEP4     JRT    POSIVE
0AEE  01000000                    00518            DC     XL4'01000000'
0AF2  D2 00 0AFE 1A85             00519            MVC    CATEP4+20(1),CATEPS+2
0AF8  41 F0 1248                  00520            JRT    POSIVE
0AFC  01000000                    00521            DC     XL4'01000000'
0B00  D7 00 0AFC 199F             00522            XC     CATEP4+18(1),PARAM1
0B06  D2 00 1A85 1A86             00523            MVC    CATEPS+2(1),CATEPS+3
0B0C  D2 00 1A86 0AFE             00524            MVC    CATEPS+3(1),CATEP4+20
0B12  FE 00 1A82 199F             00525            AB     T00S00(1),PARAM1
0B18  43 C0 0AF2                  00526            JL     CATEP4+8
0B1C  43 F0 0966                  00527            JU     TAIL
```

```
                          00529          *      TEST  01

0B20  41 F0 0AC8          00531 T01STR   JRT    CATEPO
0B24  01016564            00532          DC     XL4'01016564'

                          00535          *      TEST  02

0B28  41 F0 0AC8          00537 T02STR   JRT    CATEPO
0B2C  01036764            00538          DC     XL4'01036764'

                          00541          *      TEST  03

0B30  41 F0 0AC8          00543 T03STR   JRT    CATEPO
0B34  01086C64            00544          DC     XL4'01086C64'

                          00547          *      TEST  04

0B38  41 F0 0AC8          00549 T04STR   JRT    CATEPO
0B3C  01107464            00550          DC     XL4'01107464'
```

```
                          00553          *      TEST  05

0B40  41 F0 0AC8          00555 T05STR   JRT    CATEPO
0B44  0140A464            00556          DC     XL4'0140A464'

                          00558          *      TEST  06

0B48  41 F0 0AC8          00560 T06STR   JRT    CATEPO
0B4C  01808A0A            00561          DC     XL4'01808A0A'

                          00564          *      TEST  07

0B50  41 F0 0AC8          00566 T07STR   JRT    CATEPO
0B54  01CACA00            00567          DC     XL4'01CACA00'

                          00570          *      TEST  08

0B58  41 F0 0AC8          00572 T08STR   JRT    CATEPO
0B5C  014B550A            00573          DC     XL4'014B550A'
```

```
                          00575          *      TEST  09

0B60  92 9D 1A88          00577 T09STR   MVI    X'9D',RADPO1
0B64  D2 01 0B82 1AF0     00578          MVC    T09002+10(2),RADPA1
0B6A  D2 01 0B7C 1AF2     00579          MVC    T09002+4(2),RADPA2
0B70  41 F0 1248          00580          JRT    POSIVE
0B74  01646400            00581          DC     XL4'01646400'
0B78  D2 00 1A89 1A8A     00582 T09002   MVC    RADPO2(1),RADPOS
0B7E  D2 00 0BB0 1A8B     00583          MVC    T09010+2(1),RADPOS+1
0B84  92 00 0BAF          00584          MVI    X'00',T09010+1
0B88  92 00 0BAE          00585          MVI    X'00',T09010
0B8C  FF 00 1A89 0BB0     00586          SB     RADPO2(1),T09010-1(1)
0B92  43 30 0BA4          00587          JGE    T09010-10
0B96  92 01 0BAE          00588          MVI    X'01',T09010
0B9A  FF 00 0BAF 1A89     00589          SB     T09010-2(1),RADPO2(1)
0BA0  43 F0 0BAA          00590          JU     *+10
0BA4  D2 00 0BAF 1A89     00591          MVC    T09010+1(1),RADPO2
0BAA  41 F0 1248          00592          JRT    POSIVE
0BAE  00000000            00593 T09010   DC     XL4'00000000'
0BB2  FE 10 0B7D 199F     00594          AB     T09002(2),PARAM1(1)
0BB8  FE 10 0B83 199F     00595          AB     T09002+6(2),PARAM1(1)
0BBE  FE 00 1A88 199F     00596          AB     RADPO1(1),PARAM1(1)
0BC4  43 C0 0B78          00597          JL     T09002
0BC8  43 F0 0966          00598          JU     TAIL
```

```
                                00600          *      TEST  10

0BCC  92 FF 0C04                00602 T10STR   MVI    X'FF',T10015
0BD0  92 00 0BEA                00603          MVI    X'00',T10010
0BD4  92 CA 0BEC                00604          MVI    X'CA',T10010+2
0BD8  92 CA 0BEB                00605          MVI    X'CA',T10010+1
0BDC  92 FF 0BF6                00606          MVI    X'FF',T10010+12
0BE0  D7 00 0BEA 199F           00607 T10005   XC     T10010(1),PARAM1
0BE6  41 F0 1248                00608          JRT    POSIVE
0BEA  00000000                  00609 T10010   DC     XL4'00000000'
0BEE  95 00 0BEC                00610          CMI    X'00',T10010+2
0BF2  43 20 0966                00611          JE     TAIL
0BF6  FF 00 0BEB 199F           00612          SB     T10010-2(1),PARAM1(1)
0BFC  43 D0 0C04                00613          JNE    T10015
0C00  92 FE 0BF6                00614          MVI    X'FE',T10010+12
0C04  FF 00 0BEC 0BEB           00615 T10015   SB     T10010-1(1),T10010-2(1)
0C0A  D7 00 0C04 199F           00616          XC     T10015(1),PARAM1
0C10  43 F0 0BE0                00617          JU     T10005
```

```
                                00619          *      TEST  11

0C14  92 00 0C4F                00621 T11STR   MVI    X'00',T11020+1
0C18  92 00 0C47                00622          MVI    X'00',T11015+11
0C1C  92 FF 0C40                00623          MVI    X'FF',T11015+4
0C20  92 CA 0C35                00624          MVI    X'CA',T11010+1
0C24  D2 00 0C36 0C35           00625 T11001   MVC    T11010+2(1),T11010+1
0C2A  D2 00 0C3D 0C35           00626          MVC    T11015+1(1),T11010+1
0C30  41 F0 1248                00627          JRT    POSIVE
0C34  01000000                  00628 T11010   DC     XL4'01000000'
0C38  41 F0 1248                00629          JRT    POSIVE
0C3C  00000000                  00630 T11015   DC     XL4'00000000'
0C40  FF 00 0C35 199F           00631          SB     T11010-2(1),PARAM1(1)
0C46  95 00 0C35                00632          CMI    X'00',T11010+1
0C4A  43 D0 0C24                00633          JNE    T11001
0C4E  43 00 0966                00634 T11020   NOJ    TAIL
0C52  92 CB 0C47                00635          MVI    X'CB',T11015+11
0C56  92 FE 0C40                00636          MVI    X'FE',T11015+4
0C5A  92 F0 0C4F                00637          MVI    X'F0',T11020+1
0C5E  43 F0 0C24                00638          JU     T11001
```

```
                                 00640          *      TEST  12

0C62  92 CA 0C98                 00642 T12STR   MVI    X'CA',T12010+2
0C66  92 CA 0C9F                 00643          MVI    X'CA',T12015+1
0C6A  92 00 0CAB                 00644          MVI    X'00',T12020+1
0C6E  92 FF 0C7C                 00645          MVI    X'FF',T12005+6
0C72  92 00 0CA3                 00646          MVI    X'00',T12015+5
0C76  D2 00 0C97 0C9F            00647 T12005   MVC    T12010+1(1),T12015+1
0C7C  FF 00 0C9F 199F            00648          SB     T12015-2(1),PARAM1(1)
0C82  FF 00 0C98 0C9F            00649          SB     T12010-1(1),T12015-2(1)
0C88  D2 00 0CA0 0C98            00650          MVC    T12015+2(1),T12010+2
0C8E  92 CA 0C98                 00651          MVI    X'CA',T12010+2
0C92  41 F0 1248                 00652          JRT    POSIVE
0C96  01000000                   00653 T12010   DC     XL4'01000000'
0C9A  41 F0 1248                 00654          JRT    POSIVE
0C9E  00000000                   00655 T12015   DC     XL4'00000000'
0CA2  95 00 0C9F                 00656          CMI    X'00',T12015+1
0CA6  43 D0 0C76                 00657          JNE    T12005
0CAA  43 00 0966                 00658 T12020   NOJ    TAIL
0CAE  92 FE 0C7C                 00659          MVI    X'FE',T12005+6
0CB2  92 CA 0CA3                 00660          MVI    X'CA',T12015+5
0CB6  92 F0 0CAB                 00661          MVI    X'F0',T12020+1
0CBA  43 F0 0C76                 00662          JU     T12005
```

```
                                00664          *      TEST  13

0CBE  92 CA 0CD9                00666 T13STR   MVI    X'CA',T13010+1
0CC2  92 FF 0CE0                00667          MVI    X'FF',T13015
0CC6  92 00 0CEF                00668          MVI    X'00',T13020+1
0CCA  92 00 0CE7                00669          MVI    X'00',T13015+7
0CCE  D2 00 0CDA 0CD9           00670 T13005   MVC    T13010+2(1),T13010+1
0CD4  41 F0 1248                00671          JRT    POSIVE
0CD8  01000000                  00672 T13010   DC     XL4'01000000'
0CDC  41 F0 1446                00673          JRT    REHOME
0CE0  FF 00 0CD9 199F           00674 T13015   SB     T13010-2(1),PARAM1(1)
0CE6  95 00 0CD9                00675          CMI    X'00',T13010+1
0CEA  43 D0 0CCE                00676          JNE    T13005
0CEE  43 00 0966                00677 T13020   NOJ    TAIL
0CF2  92 F0 0CEF                00678          MVI    X'F0',T13020+1
0CF6  92 FE 0CE0                00679          MVI    X'FE',T13015
0CFA  92 CB 0CE7                00680          MVI    X'CB',T13015+7
0CFE  43 F0 0CCE                00681          JU     T13005
```

```
                                00683          *      TEST  14

0D02  92 F0 0D43                00685 T14STR   MVI    X'F0',T14003+1
0D06  41 F0 1248                00686          JRT    POSIVE
0D0A  F1CACA00                  00687          DC     XL4'F1CACA00'
0D0E  92 00 0D41                00688          MVI    X'00',T14002+1
0D12  D2 04 0DBC 0DC1           00689          MVC    DATAS(5),DSHIFT
0D18  D2 05 0DB0 0DB6           00690          MVC    PARASH(6),PSHIFT
0D1E  D2 00 04B8 0DBC           00691 T14001   MVC    ENTRA(1),DATAS
0D24  D2 8E 04B9 04B8           00692          MVC    ENTRA+1(143),ENTRA
0D2A  D2 8F 0548 04B8           00693          MVC    ENTRA+144(144),ENTRA
0D30  D2 8F 05D8 04B8           00694          MVC    ENTRA+288(144),ENTRA
0D36  D2 8F 0668 04B8           00695          MVC    ENTRA+432(144),ENTRA
0D3C  41 F0 1512                00696          JRT    REGIVE
0D40  CA00                      00697 T14002   DC     XL2'CA00'
0D42  43 F0 0D4E                00698 T14003   JU     *+12
0D46  9E 00 0DC6                00699 T14004   PER    X'00',SEEKIN
0D4A  9E 00 0DCE                00700 T14005   PER    X'00',SEEKAV
0D4E  D2 01 0D58 0D40           00701          MVC    *+10(2),T14002
0D54  41 F0 1580                00702          JRT    REVE60
0D58  0000                      00703          DC     XL2'0000'
0D5A  95 CC 0D41                00704          CMI    X'CC',T14002+1
0D5E  43 20 0966                00705          JE     TAIL
0D62  95 4C 0D41                00706          CMI    X'4C',T14002+1
0D66  43 D0 0D6E                00707          JNE    *+8
0D6A  92 7C 0D41                00708          MVI    X'7C',T14002+1
0D6E  FE 00 0D41 0DB0           00709          AB     T14002(1),PARASH
0D74  D2 00 0DB5 0DB0           00710          MVC    PARASI+4(1),PARASH
0D7A  D2 04 0DB0 0DB1           00711          MVC    PARASH(5),PARASI
0D80  95 04 0DB0                00712          CMI    X'04',PARASH
0D84  43 20 0D98                00713          JE     T14PTR
```

```
0D88  D2 00 0DC0 0DBC      00714          MVC    DATASH+3(1),DATAS
0D8E  D2 03 0DBC 0DBD      00715          MVC    DATAS(4),DATASH
0D94  43 F0 0D1E           00716          JU     T14001
0D98  D2 47 04B8 1AFF      00717 T14PTR   MVC    ENTRA(72),PTTERN
0D9E  D2 47 0500 1AFF      00718          MVC    ENTRA+72(72),PTTERN
0DA4  43 F0 0D2A           00719          JU     T14002-22
```

```
                                00721          *      TEST  15

0DA8  92 00 0D43                00723 T15STR   MVI    X'00',T14003+1
0DAC  43 F0 0D06                00724          JU     T14STR+4
0DB0  01                        00725 PARASH   DC     XL1'01'
0DB1  0101010401                00726 PARASI   DC     XL5'0101010401'
0DB6  010101010401              00727 PSHIFT   DC     XL6'010101010401'
0DBC  00                        00728 DATAS    DC     XL1'00'
0DBD  00FF55AA                  00729 DATASH   DC     XL4'00FF55AA'
0DC1  00FF55AA00                00730 DSHIFT   DC     XL5'00FF55AA00'
0DC6  50 4A 0001 0DCC           00731 SEEKIN   DP     X'50',X'4A',IN(2)
0DCC  0040                      00732 IN       DC     XL2'0040'
0DCE  50 4A 0001 0DD4           00733 SEEKAV   DP     X'50',X'4A',AV(2)
0DD4  0140                      00734 AV       DC     XL2'0140'
```

```
                                00736          *      TEST  16

0DD6  92 01 0DF0                00738 T16STR   MVI    X'01',T16001+2
0DDA  92 00 0DF8                00739          MVI    X'00',T16002+2
0DDE  FE 00 0DF0 199F           00740 T16000   AB     T16001-1(1),PARAM1(1)
0DE4  FE 00 0DF8 199F           00741          AB     T16002-1(1),PARAM1(1)
0DEA  41 F0 1248                00742          JRT    POSIVE
0DEE  F1020000                  00743 T16001   DC     XL4'F1020000'
0DF2  41 F0 1248                00744          JRT    POSIVE
0DF6  F0010000                  00745 T16002   DC     XL4'F0010000'
0DFA  95 14 0DF8                00746          CMI    X'14',T16002+2
0DFE  43 C0 0DDE                00747          JL     T16000
0E02  92 13 0E1C                00748          MVI    X'13',T16003+2
0E06  92 14 0E2C                00749          MVI    X'14',T16004+2
0E0A  FF 00 0E1C 199F           00750 T16010   SB     T16003-1(1),PARAM1(1)
0E10  FF 00 0E2C 199F           00751          SB     T16004-1(1),PARAM1(1)
0E16  41 F0 1248                00752          JRT    POSIVE
0E1A  F0020000                  00753 T16003   DC     XL4'F0020000'
0E1E  95 00 0E1C                00754          CMI    X'00',T16003+2
0E22  43 20 0966                00755          JE     TAIL
0E26  41 F0 1248                00756          JRT    POSIVE
0E2A  F1010000                  00757 T16004   DC     XL4'F1010000'
0E2E  43 F0 0E0A                00758          JU     T16010
```

```
                                 00760          *      TEST  17

0E32  D2 01 0ECA 1AF9            00762 T17STR   MVC    T17030+08(2),AT1703
0E38  D2 02 0E86 1B5E            00763          MVC    T17020(3),T17002
0E3E  92 00 0EE5                 00764          MVI    X'00',T17033+1
0E42  D2 01 0E8E 1AFB            00765          MVC    T17020+08(2),AT1710
0E48  D2 01 0E52 1AFD            00766          MVC    T17011+4(2),AT1701
0E4E  D2 00 0EC4 1B47            00767 T17011   MVC    T17030+2(1),T17001
0E54  92 F1 0EC2                 00768          MVI    X'F1',T17030
0E58  D2 00 0EC3 0EC4            00769          MVC    T17030+1(1),T17030+2
0E5E  FF 00 0EC3 0E88            00770          SB     T17030-2(1),T17020-1(1)
0E64  43 30 0E7C                 00771          JGE    T17020-10
0E68  92 F0 0EC2                 00772          MVI    X'F0',T17030
0E6C  FF 00 0EC5 0EC3            00773          SB     T17030(1),T17030-2(1)
0E72  D2 00 0EC3 0EC5            00774          MVC    T17030+1(1),T17030+3
0E78  92 00 0EC5                 00775          MVI    X'00',T17030+3
0E7C  FE 10 0E53 19A0            00776          AB     T17011(2),PARAM2(1)
0E82  41 F0 1248                 00777          JRT    POSIVE
0E86  F0000000                   00778 T17020   DC     XL4'F0000000'
0E8A  D2 00 0E88 1B48            00779          MVC    T17020+2(1),T17001+1
0E90  92 F1 0E86                 00780          MVI    X'F1',T17020
0E94  D2 00 0E87 0E88            00781          MVC    T17020+1(1),T17020+2
0E9A  FF 00 0E87 0EC4            00782          SB     T17020-2(1),T17030-1(1)
0EA0  43 30 0EB8                 00783          JGE    T17030-10
0EA4  92 F0 0E86                 00784          MVI    X'F0',T17020
0EA8  FF 00 0E89 0E87            00785          SB     T17020(1),T17020-2(1)
0EAE  D2 00 0E87 0E89            00786          MVC    T17020+1(1),T17020+3
0EB4  92 00 0E89                 00787          MVI    X'00',T17020+3
0EB8  FE 10 0E8F 19A0            00788          AB     T17020+6(2),PARAM2(1)
0EBE  41 F0 1248                 00789          JRT    POSIVE
0EC2  F0000000                   00790 T17030   DC     XL4'F0000000'
```

```
0EC6  D2 00 04B8 1B61   00791          MVC   ENTRA(1),T17003
0ECC  D2 FE 04B9 04B8   00792          MVC   ENTRA+1(255),ENTRA
0ED2  D2 FF 05B8 04B8   00793          MVC   ENTRA+256(256),ENTRA
0ED8  D2 3F 06B8 04B8   00794          MVC   ENTRA+512(64),ENTRA
0EDE  FE 10 0ECB 199F   00795          AB    T17030+6(2),PARAM1(1)
0EE4  43 00 0F34        00796 T17033   NOJ   T17065
0EE8  95 09 0EC4        00797          CMI   X'09',T17030+2
0EEC  43 D0 0EF4        00798          JNE   T17034-4
0EF0  92 F0 0EE5        00799          MVI   X'F0',T17033+1
0EF4  92 00 0F09        00800          MVI   X'00',T17035+1
0EF8  D2 00 0F08 0EC4   00801 T17034   MVC   T17035(1),T17030+2
0EFE  D2 05 0DB0 0DB6   00802          MVC   PARASH(6),PSHIFT
0F04  41 F0 1512        00803          JRT   REGIVE
0F08  0000              00804 T17035   DC    XL2'0000'
0F0A  95 CC 0F09        00805          CMI   X'CC',T17035+1
0F0E  43 20 0E4E        00806          JE    T17011
0F12  95 4C 0F09        00807          CMI   X'4C',T17035+1
0F16  43 D0 0F1E        00808          JNE   *+8
0F1A  92 7C 0F09        00809          MVI   X'7C',T17035+1
0F1E  FE 00 0F09 0DB0   00810          AB    T17035(1),PARASH
0F24  D2 00 0DB5 0DB0   00811          MVC   PARASI+4(1),PARASH
0F2A  D2 04 0DB0 0DB1   00812          MVC   PARASH(5),PARASI
0F30  43 F0 0F04        00813          JU    T17035-4
0F34  92 00 0F49        00814 T17065   MVI   X'00',T17070+1
0F38  D2 00 0F48 0EC4   00815          MVC   T17070(1),T17030+2
0F3E  D2 05 0DB0 0DB6   00816          MVC   PARASH(6),PSHIFT
0F44  41 F0 1580        00817          JRT   REVE60
0F48  0000              00818 T17070   DC    XL2'0000'
0F4A  95 CC 0F49        00819          CMI   X'CC',T17070+1
0F4E  43 20 0F74        00820          JE    T17080
0F52  95 4C 0F49        00821          CMI   X'4C',T17070+1
0F56  43 D0 0F5E        00822          JNE   *+8
0F5A  92 7C 0F49        00823          MVI   X'7C',T17070+1
0F5E  FE 00 0F49 0DB0   00824          AB    T17070(1),PARASH
```

```
0F64  D2 00 0DB5 0DB0        00825          MVC    PARASI+4(1),PARASH
0F6A  D2 04 0DB0 0DB1        00826          MVC    PARASH(5),PARASI
0F70  43 F0 0F44             00827          JU     T17070-4
0F74  95 C5 0EC4             00828 T17080   CMI    X'C5',T17030+2
0F78  43 D0 0E4E             00829          JNE    T17011
0F7C  43 F0 0966             00830          JU     TAIL
```

```
                                  00832          *      TEST  18

0F80  95 FF 02AB                  00834 T18STR   CMI    X'FF',UDISC2
0F84  43 20 0966                  00835          JE     TAIL
0F88  D2 47 04B8 1AFF             00836          MVC    ENTRA(72),PTTERN
0F8E  D2 47 0500 04B8             00837          MVC    ENTRA+72(72),ENTRA
0F94  D2 8F 0548 04B8             00838          MVC    ENTRA+144(144),ENTRA
0F9A  D2 8F 05D8 04B8             00839          MVC    ENTRA+288(144),ENTRA
0FA0  D2 8F 0668 04B8             00840          MVC    ENTRA+432(144),ENTRA
0FA6  D2 01 0FBA 1BAE             00841          MVC    T18006+4(2),ALLUD1
0FAC  D2 01 0FC8 1BB0             00842          MVC    T18007+4(2),ALLUD2
0FB2  92 00 1BB6                  00843          MVI    X'00',INVERT
0FB6  D2 01 1CAC 1BAA             00844 T18006   MVC    COMPER+26(2),ALUD1
0FBC  41 F0 1C92                  00845 T18106   JRT    COMPER
0FC0  0FC4                        00846          DC     AL2(T18007)
0FC2  1023                        00847          DC     AL2(T18014+1)
0FC4  D2 01 1CAC 1BAC             00848 T18007   MVC    COMPER+26(2),ALUD2
0FCA  41 F0 1C92                  00849          JRT    COMPER
0FCE  0FDC                        00850          DC     AL2(T18108)
0FD0  101B                        00851          DC     AL2(T18011+1)
0FD2  101F                        00852          DC     AL2(T18011+5)
0FD4  1027                        00853          DC     AL2(T18015+1)
0FD6  102B                        00854          DC     AL2(T18016+1)
0FD8  102F                        00855          DC     AL2(T18016+5)
0FDA  1033                        00856          DC     AL2(T18018+1)
0FDC  92 0B 1A03                  00857 T18108   MVI    X'0B',LETE+3
0FE0  D2 02 19F1 199C             00858          MVC    REVEA1(3),ZERO2
0FE6  D2 02 19EE 19F1             00859          MVC    REVEA(3),REVEA1
0FEC  FE 22 19F0 19F0             00860          AB     REVEA,REVEA
0FF2  D2 01 1A0D 199C             00861          MVC    TETE+1(2),ZERO2
0FF8  92 00 1BA8                  00862 T18008   MVI    X'00',PASSI
0FFC  92 00 19C2                  00863          MVI    X'00',POSAVA
1000  D2 00 1007 02AA             00864          MVC    T18000+1(1),UDISC1
```

```
1006  9E 00 1A11                00865 T18000    PER    X'00',RETHOM
100A  D2 00 1011 02AB           00866           MVC    T18001+1(1),UDISC2
1010  9E 00 1A11                00867 T18001    PER    X'00',RETHOM
1014  D7 00 19C2 199F           00868 T18009    XC     POSAVA(1),PARAM1
101A  9E 00 1A06                00869 T18011    PER    X'00',INTE
101E  9E 00 1A00                00870           PER    X'00',LETE
1022  9E 00 19BC                00871 T18014    PER    X'00',POSAV
1026  9E 00 19E8                00872 T18015    PER    X'00',REVEAD
102A  9E 00 19F4                00873 T18016    PER    X'00',REVERE
102E  9E 00 19E8                00874           PER    X'00',REVEAD
1032  9E 00 19FA                00875 T18018    PER    X'00',REVELE
1036  D5 8F 04B8 06F8           00876           CMC    ENTRA(144),ESCE
103C  43 D0 10EE                00877           JNE    T18079
1040  D5 8F 0548 0788           00878           CMC    ENTRA+144(144),ESCE+144
1046  43 D0 10EE                00879           JNE    T18079
104A  D5 8F 05D8 0818           00880           CMC    ENTRA+288(144),ESCE+288
1050  43 D0 10EE                00881           JNE    T18079
1054  D5 8F 0668 08A8           00882           CMC    ENTRA+432(144),ESCE+432
105A  43 D0 10EE                00883           JNE    T18079
105E  02 40                     00884           LOFF
1060  D7 8F 06F8 06F8           00885           XC     ESCE(144),ESCE
1066  D7 8F 0788 0788           00886           XC     ESCE+144(144),ESCE+144
106C  D7 8F 0818 0818           00887           XC     ESCE+288(144),ESCE+288
1072  D7 8F 08A8 08A8           00888           XC     ESCE+432(144),ESCE+432
1078  53 80 1014                00889           JS1    T18009
107C  FE 00 1BA8 199F           00890           AB     PASSI(1),PARAM1(1)
1082  95 04 1BA8                00891           CMI    X'04',PASSI
1086  43 C0 1014                00892           JL     T18009
108A  FE 00 19F3 19A5           00893           AB     REVEA1(1),PARA16(1)
1090  FE 00 1A0E 19A5           00894           AB     TETE(1),PARA16(1)
1096  95 A0 1A0E                00895 T18030    CMI    X'A0',TETE+2
109A  43 D0 0FF8                00896           JNE    T18008
```

```
109E  95 01 1A0D                00897          CMI    X'01',TETE+1
10A2  43 20 10BA                00898          JE     **24
10A6  92 01 1A0D                00899          MVI    X'01',TETE+1
10AA  92 01 19F2                00900          MVI    X'01',REVEA1+1
10AE  92 00 1A0E                00901          MVI    X'00',TETE+2
10B2  92 02 19F3                00902          MVI    X'02',REVEA1+2
10B6  43 F0 0FF8                00903          JU     T18008
10BA  FE 10 1A03 19A1           00904          AB     LETE-2(2),PARAM3(1)
10C0  95 1D 1A03                00905          CMI    X'1D',LETE+3
10C4  43 C0 0FE0                00906          JL     T18108+4
10C8  95 01 1BB6                00907          CMI    X'01',INVERT
10CC  43 20 10E4                00908          JE     T18021
10D0  92 01 1BB6                00909          MVI    X'01',INVERT
10D4  D2 01 0FBA 1BB0           00910          MVC    T18006+4(2),ALLUD2
10DA  D2 01 0FC8 1BAE           00911          MVC    T18007+4(2),ALLUD1
10E0  43 F0 0FB6                00912          JU     T18006
10E4  D2 01 1CAC 1BAA           00913 T18021   MVC    COMPER+26(2),ALUD1
10EA  43 F0 0966                00914          JU     TAIL
10EE  02 80                     00915 T18079   LON
10F0  53 80 1014                00916          JS1    T18009
10F4  D2 02 023A 1C8F           00917          MVC    CHRTS+56(3),UD
10FA  92 40 023E                00918          MVI    X'40',CHRTS+60
10FE  92 40 023F                00919          MVI    X'40',CHRTS+61
1102  D8 00 023E 1033           00920          UPK    CHRTS+60(1),T18018+1
1108  41 F0 1910                00921          JRT    STAMP
110C  41 F0 1880                00922          JRT    STAMPA
1110  41 F0 02A2                00923          JRT    HLT
1114  53 80 1014                00924          JS1    T18009
1118  02 40                     00925          LOFF
111A  43 F0 10E4                00926          JU     T18021
```

```
                                00928          *      TEST  019

111E  9E 00 1A11                00930 MODE     PER    X'00',RETHOM
1122  92 40 1FB9                00931          MVI    X'40',MODE01+6
1126  D2 03 1FC3 1F9B           00932          MVC    MODE01+16(4),MODE80
112C  D2 01 1D38 1D66           00933          MVC    WATT(2),ATT
1132  92 01 1FE7                00934          MVI    X'01',MODISC
1136  9E 00 19AA                00935 MOD01    PER    X'00',POTESE
113A  43 10 120E                00936          JG     ERROR
113E  9E 00 1FC7                00937 MODE2    PER    X'00',POSM1
1142  D2 03 1FC3 1FAF           00938          MVC    MODE01+16(4),MODE85
1148  9E 00 19AA                00939 MODE3    PER    X'00',POTESE
114C  43 10 120E                00940          JG     ERROR
1150  9E 00 1FC7                00941 MODE4    PER    X'00',POSM1
1154  92 41 1FB9                00942          MVI    X'41',MODE01+6
1158  D2 03 1FC3 1FA3           00943          MVC    MODE01+16(4),MODE82
115E  9E 00 19AA                00944 MODE44   PER    X'00',POTESE
1162  43 20 120E                00945          JE     ERROR
1166  41 F0 1D3C                00946          JRT    SUBWAT
116A  9E 00 1A11                00947 MODE33   PER    X'00',RETHOM
116E  92 40 1FB9                00948          MVI    X'40',MODE01+6
1172  D2 03 1FC3 1F9B           00949          MVC    MODE01+16(4),MODE80
1178  41 F0 1D3C                00950          JRT    SUBWAT
117C  9E 00 1A11                00951 MOD31    PER    X'00',RETHOM
1180  9E 00 19AA                00952 MODE34   PER    X'00',POTESE
1184  43 10 120E                00953          JG     ERROR
1188  02 40                     00954          LOFF
118A  53 80 111E                00955          JS1    MODE
118E  9E 00 1A11                00956 MODE5    PER    X'00',RETHOM
1192  92 02 1FE7                00957          MVI    X'02',MODISC
1196  92 40 1FB9                00958          MVI    X'40',MODE01+6
```

```
119A  D2 03 1FC3 1F9B   00959          MVC    MODE01+16(4),MODE80
11A0  9E 00 19AA        00960 MODE6    PER    X'00',POTESE
11A4  43 10 120E        00961          JG     ERROR
11A8  9E 00 1FCD        00962 MODE7    PER    X'00',POS202
11AC  D2 03 1FC3 1FA7   00963          MVC    MODE01+16(4),MODE83
11B2  9E 00 19AA        00964 MODE8    PER    X'00',POTESE
11B6  43 10 120E        00965          JG     ERROR
11BA  9E 00 1FD3        00966 MODE9    PER    X'00',POS1
11BE  D2 03 1FC3 1F9F   00967          MVC    MODE01+16(4),MODE81
11C4  9E 00 19AA        00968 MODE10   PER    X'00',POTESE
11C8  43 10 120E        00969          JG     ERROR
11CC  9E 00 1FD9        00970 MODE11   PER    X'00',POS5
11D0  92 41 1FB9        00971          MVI    X'41',MODE01+6
11D4  D2 03 1FC3 1FAB   00972          MVC    MODE01+16(4),MODE84
11DA  9E 00 19AA        00973 MODE12   PER    X'00',POTESE
11DE  43 20 120E        00974          JE     ERROR
11E2  41 F0 1D3C        00975          JRT    SUBWAT
11E6  9E 00 1A11        00976 MOD112   PER    X'00',RETHOM
11EA  D2 03 1FC3 1F9B   00977          MVC    MODE01+16(4),MODE80
11F0  92 40 1FB9        00978          MVI    X'40',MODE01+6
11F4  41 F0 1D3C        00979          JRT    SUBWAT
11F8  9E 00 1A11        00980 MOD30    PER    X'00',RETHOM
11FC  9E 00 19AA        00981 MOD02    PER    X'00',POTESE
1200  43 10 120E        00982          JG     ERROR
1204  02 40             00983          LOFF
1206  53 80 118E        00984          JS1    MODE5
120A  43 F0 0966        00985          JU     TAIL
120E  02 80             00986 ERROR    LON
1210  41 F0 1D3C        00987          JRT    SUBWAT
1214  53 80 123C        00988          JS1    MODO
1218  D2 1B 020C 1FE9   00989          MVC    CHRTS+10(28),SEEIN
121E  41 F0 0100        00990          JRT    PRINT
1222  D2 13 020C 1FB3   00991          MVC    CHRTS+10(20),MODE01
1228  41 F0 0100        00992          JRT    PRINT
```

```
122C  41 F0 0188          00993          JRT    JUMP
1230  41 F0 02A2          00994          JRT    HLT
1234  53 80 123C          00995          JS1    MODO
1238  43 F0 0966          00996          JU     TAIL
123C  95 01 1FE7          00997 MODO     CMI    X'01',MODISC
1240  43 20 111E          00998          JE     MODE
1244  43 F0 118E          00999          JU     MODE5
```

```
                                01001          *      SEEK ROUTINE

1248  D2 01 140A 00FE           01003 POSIVE   MVC    POVE98+2(2),254
124E  D2 01 1264 00FE           01004          MVC    *+22(2),254
1254  FE 10 140B 19A2           01005          AB     POVE98(2),PARAM4(1)
125A  D2 00 1A7E 1A7C           01006          MVC    POVE05(1),POVE00+2
1260  D2 03 1A7A 0000           01007          MVC    POVE00(4),0000
1266  D7 29 1B76 1B76           01008          XC     FALTI(42),FALTI
126C  92 FF 1B73                01009          MVI    X'FF',CAL
1270  D2 02 1A7F 1A7A           01010          MVC    POVE06(3),POVE00
1276  D2 00 1A87 19D4           01011 POVE10   MVC    POHEA1(1),POHEAD+1
127C  9E                        01012          DC     XL1'9E'
127D  00                        01013 UDISK    DC     XL1'00'
127E  19B6                      01014          DC     AL2(POSIZI)
1280  41 F0 16F8                01015          JRT    REFUS1
1284  9E 00 19AA                01016 POVE49   PER    X'00',POTESE
1288  43 10 140C                01017          JG     POVE40
128C  D2 01 19CB 1A7C           01018 POVE16   MVC    POINDR+1(2),POVE00+2
1292  92 04 19CA                01019          MVI    X'04',POINDR
1296  FE 22 19CC 19CC           01020          AB     POINDR(3),POINDR(3)
129C  9E 00 19C4                01021 POVE50   PER    X'00',POINDI
12A0  41 F0 16F8                01022          JRT    REFUS1
12A4  9E 00 19CD                01023 POVE51   PER    X'00',POLEGE
12A8  9E 00 19AC                01024 POVE52   PER    X'00',POMARE
12AC  43 20 12CC                01025          JE     POVE17-4
12B0  02 80                     01026          LON
12B2  41 F0 1802                01027          JRT    SW1A
12B6  43 F0 142E                01028          JU     POVE35
12BA  41 F0 1954                01029          JRT    STEPS
12BE  D2 07 0216 1A2B           01030          MVC    CHRTS+20(8),MARET
12C4  41 F0 1824                01031          JRT    SW1Z
12C8  43 F0 142E                01032          JU     POVE35
12CC  41 F0 16F8                01033          JRT    REFUS1
```

```
12D0  D5 00 1A7C 19D4
12D6  43 D0 12F2
12DA  02 40
12DC  41 F0 1802
12E0  43 F0 132C
12E4  D5 00 1A7C 1A81
12EA  43 D0 132C
12EE  43 F0 1394
12F2  02 80
12F4  41 F0 1802
12F8  43 F0 132C
12FC  41 F0 1954
1300  D2 0C 020C 1BF4
1306  D2 13 0235 1BE0

130C  41 F0 03FA
1310  19D4
1312  023A
1314  199F

1316  41 F0 03FA
131A  19D5
131C  0246
131E  19A0
1320  92 50 0246
1324  41 F0 1824
1328  43 F0 132C
132C  D5 00 1A7C 1A7E
1332  92 00 1A7B
1336  43 D0 1362
133A  92 01 1A7A
133E  D2 00 1A7C 1A81
```

```
01034 POVE17    CMC     POVE00+2(1),POHEAD+1
01035           JNE     POVE18
01036           LOFF
01037           JRT     SW1A
01038           JU      POVE69
01039           CMC     POVE00+2(1),POVE06+2
01040           JNE     POVE69
01041           JU      POVE30
01042 POVE18    LON
01043           JRT     SW1A
01044           JU      POVE69
01045           JRT     STEPS
01046           MVC     CHRTS+10(13),POERRO
01047           MVC     CHRTS+51(20),POSTEP+41
01048           *BID7   POHEAD+1,CHRTS+56,PARAM1
                JRT     YBID7
                DC      AL2(POHEAD+1)
                DC      AL2(CHRTS+56)
                DC      AL2(PARAM1)
01049           *BID7   POHEAD+2,CHRTS+68,PARAM2
                JRT     YBID7
                DC      AL2(POHEAD+2)
                DC      AL2(CHRTS+68)
                DC      AL2(PARAM2)
01050           MVI     X'50',CHRTS+68
01051           JRT     SW1Z
01052           JU      POVE69
01053 POVE69    CMC     POVE00+2(1),POVE05
01054           MVI     X'00',POVE00+1
01055           JNE     POVE80
01056           MVI     X'01',POVE00
01057           MVC     POVE00+2(1),POVE06+2
```

```
1344  D2 00 1A82 1A81        01058          MVC    T00S00(1),POVE06+2
134A  FF 00 1A82 19D4        01059          SB     T00S00(1),POHEAD-1(1)
1350  43 10 138A             01060          JG     POVE95
1354  92 00 1A7A             01061          MVI    X'00',POVE00
1358  FF 00 1A7B 1A82        01062          SB     POVE00-2(1),T00S00(1)
135E  43 F0 1276             01063          JU     POVE10
1362  92 01 1A7A             01064 POVE80   MVI    X'01',POVE00
1366  D2 00 1A82 1A7E        01065          MVC    T00S00(1),POVE05
136C  D2 00 1A7C 1A7E        01066          MVC    POVE00+2(1),POVE05
1372  FF 00 1A82 19D4        01067          SB     T00S00(1),POHEAD-1(1)
1378  43 10 138A             01068          JG     POVE95
137C  92 00 1A7A             01069          MVI    X'00',POVE00
1380  FF 00 1A7B 1A82        01070          SB     POVE00-2(1),T00S00
1386  43 F0 1276             01071          JU     POVE10
138A  D2 00 1A7B 1A82        01072 POVE95   MVC    POVE00+1(1),T00S00
1390  43 F0 1276             01073          JU     POVE10
1394  95 0F 1A7A             01074 POVE30   CMI    X'0F',POVE00
1398  43 E0 1404             01075          JLE    POVE98-4
139C  D4 00 19D3 19A1        01076          NC     POHEAD(1),PARAM3
13A2  95 00 19D3             01077          CMI    X'00',POHEAD
13A6  43 20 13CE             01078          JE     POVE32+6
13AA  D4 00 19D5 19A7        01079          NC     POHEAD+2(1),EFFE8
13B0  FE 00 19D5 19A3        01080          AB     POHEAD(1),PARAM8(1)
13B6  95 02 19D3             01081          CMI    X'02',POHEAD
13BA  43 D0 13C8             01082          JNE    *+14
13BE  D2 00 1B8B 19D5        01083 POVE34   MVC    FALTA(1),POHEAD+2
13C4  43 F0 13CE             01084          JU     *+10
13C8  D2 00 1B76 19D5        01085 POVE32   MVC    FALTI(1),POHEAD+2
13CE  FE 10 13CB 199F        01086          AB     POVE32-2(2),PARAM1(1)
13D4  FE 10 13C1 199F        01087          AB     POVE34-2(2),PARAM1(1)
13DA  95 48 1A7D             01088          CMI    X'48',POVE00+3
13DE  43 D0 13E6             01089          JNE    *+8
13E2  92 78 1A7D             01090          MVI    X'78',POVE00+3
13E6  FE 00 1A7D 19A3        01091          AB     POVE00(1),PARAM8(1)
```

```
13EC  95 D0 1A7D                01092            CMI    X'D0',POVE00+3
13F0  43 C0 128C                01093            JL     POVE16
13F4  43 C0 128C                01094            JL     POVE16
13F8  D2 01 13CA 1BA4           01095            MVC    POVE32+2(2),ALFO
13FE  D2 01 13C0 1BA6           01096            MVC    POVE34+2(2),ALFU
1404  92 F0 1809                01097            MVI    X'F0',SW1A+7
1408  43 F0 0000                01098 POVE98     JU     0000
140C  02 80                     01099 POVE40     LON
140E  D2 01 1D36 1D66           01100            MVC    WAIT(2),ATT
1414  41 F0 1D42                01101            JRT    SUBWAY
1418  41 F0 1802                01102            JRT    SW1A
141C  43 F0 142E                01103            JU     POVE35
1420  41 F0 1954                01104            JRT    STEPS
1424  D2 07 0216 1A33           01105            MVC    CHRTS+20(8),TESET
142A  41 F0 1824                01106            JRT    SW1Z
142E  41 F0 1446                01107 POVE35     JRT    REHOME
1432  92 01 1A7A                01108            MVI    X'01',POVE00
1436  D2 00 1A7B 1A7E           01109            MVC    POVE00+1(1),POVE05
143C  D2 00 1A7C 1A7E           01110            MVC    POVE00+2(1),POVE05
1442  43 F0 1276                01111            JU     POVE10
```

```
                                 01113          *      RETURN TO HOME ROUTINE

1446  D2 01 14F2 00FE            01115 REHOME   MVC    REHO90+2(2),254
144C  D2 00 1A87 19D4            01116          MVC    POHEA1(1),POHEAD+1
1452  D7 01 1A7B 1A7B            01117          XC     POVE00+1(2),POVE00+1
1458  9E 00 1A0F                 01118          PER    X'00',RESET
145C  9E 00 1A11                 01119          PER    X'00',RETHOM
1460  41 F0 1720                 01120          JRT    REFUS2
1464  9E 00 19AA                 01121          PER    X'00',POTESE
1468  43 20 148A                 01122          JE     REHOM1
146C  02 80                      01123          LON
146E  D2 01 1D36 1D66            01124          MVC    WAIT(2),ATT
1474  41 F0 1D42                 01125          JRT    SUBWAY
1478  41 F0 1842                 01126          JRT    SW1B
147C  41 F0 14F4                 01127          JRT    STUMP
1480  D2 07 0216 1A33            01128          MVC    CHRTS+20(8),TESET
1486  43 F0 185E                 01129          JU     SW1V
148A  9E 00 19D6                 01130 REHOM1   PER    X'00',READDR
148E  41 F0 1720                 01131          JRT    REFUS2
1492  9E 00 19CD                 01132          PER    X'00',POLEGE
1496  9E 00 19AC                 01133          PER    X'00',POMARE
149A  43 20 14B6                 01134          JE     REHOM2-4
149E  02 80                      01135          LON
14A0  9E 00 1A0F                 01136          PER    X'00',RESET
14A4  41 F0 1842                 01137          JRT    SW1B
14A8  41 F0 14F4                 01138          JRT    STUMP
14AC  D2 07 0216 1A2B            01139          MVC    CHRTS+20(8),MARET
14B2  43 F0 185E                 01140          JU     SW1V
14B6  41 F0 1720                 01141          JRT    REFUS2
14BA  95 00 19D4                 01142 REHOM2   CMI    X'00',POHEAD+1
14BE  43 20 14E6                 01143          JE     REHO90-10
14C2  02 80                      01144          LON
14C4  41 F0 1842                 01145          JRT    SW1B
```

```
14C8  41 F0 14F4          01146          JRT    STUMP
14CC  D2 0B 020C 1BF4     01147          MVC    CHRTS+10(12),POERRO
14D2  D2 03 021B 1BD4     01148          MVC    CHRTS+25(4),POSTEP+29
                          01149          *BID7  POHEAD+1,CHRTS+30,PARAM1
14D8  41 F0 03FA                         JRT    YBID7
14DC  19D4                               DC     AL2(POHEAD+1)
14DE  0220                               DC     AL2(CHRTS+30)
14E0  199F                               DC     AL2(PARAM1)
14E2  43 F0 185E          01150          JU     SW1V
14E6  02 40               01151          LOFF
14E8  41 F0 1842          01152          JRT    SW1B
14EC  92 F0 1849          01153          MVI    X'F0',SW1B+7
14F0  43 F0 0000          01154 REH090   JU     0000
14F4  D2 01 1510 00FE     01155 STUMP    MVC    STUMP9+2(2),254
14FA  D2 1D 020C 1C28     01156          MVC    CHRTS+10(30),ERRRET
                          01157          *BID7  POHEA1,CHRTS+40,PARAM1
1500  41 F0 03FA                         JRT    YBID7
1504  1A87                               DC     AL2(POHEA1)
1506  022A                               DC     AL2(CHRTS+40)
1508  199F                               DC     AL2(PARAM1)
150A  41 F0 0100          01158          JRT    PRINT
150E  43 F0 0000          01159 STUMP9   JU     0000
```

```
                                 01161          *      WRITE ROUTINE

1512  D2 01 155A 00FE           01163 REGIVE   MVC    REVE99+2(2),254
1518  FE 10 155B 19A0           01164          AB     REVE99(2),PARAM2(1)
151E  D2 01 1528 00FE           01165          MVC    REVE11+4(2),254
1524  D2 01 19F2 0000           01166 REVE11   MVC    REVEA1+1(2),0000
152A  41 F0 166A                01167          JRT    BYPASS
152E  D2 02 19EE 19F1           01168          MVC    REVEA(3),REVEA1
1534  FE 22 19F0 19F0           01169          AB     REVEA(3),REVEA(3)
153A  9E 00 19E8                01170 REVE12   PER    X'00',REVEAD
153E  41 F0 1740                01171          JRT    REFUS3
1542  9E 00 19F4                01172          PER    X'00',REVERE
1546  41 F0 1740                01173          JRT    REFUS3
154A  9E 00 19B2                01174          PER    X'00',REEGOL
154E  43 10 155C                01175          JG     REVE20
1552  02 40                     01176          LOFF
1554  53 80 153A                01177          JS1    REVE12
1558  43 F0 0000                01178 REVE99   JU     0000
155C  02 80                     01179 REVE20   LON
155E  53 80 153A                01180          JS1    REVE12
1562  41 F0 1910                01181          JRT    STAMP
1566  D2 07 0216 1A3B           01182          MVC    CHRTS+20(8),EGOLT
156C  41 F0 0100                01183          JRT    PRINT
1570  41 F0 0188                01184          JRT    JUMP
1574  41 F0 02A2                01185          JRT    HLT
1578  53 80 153A                01186          JS1    REVE12
157C  43 F0 0966                01187          JU     TAIL
```

```
                                01189          *      READ AND COMPARE ROUTINE

1580  D2 01 155A 00FE           01191 REVE60   MVC    REVE99+2(2),254
1586  FE 10 155B 19A0           01192          AB     REVE99(2),PARAM2(1)
158C  D2 01 1596 00FE           01193          MVC    REVE65+4(2),254
1592  D2 01 19F2 0000           01194 REVE65   MVC    REVEA1+1(2),0000
1598  41 F0 166A                01195          JRT    BYPASS
159C  D2 02 19EE 19F1           01196          MVC    REVEA(3),REVEA1
15A2  FE 22 19F0 19F0           01197          AB     REVEA(3),REVEA(3)
15A8  9E 00 19E8                01198 REVE75   PER    X'00',REVEAD
15AC  41 F0 1770                01199          JRT    REFUS4
15B0  9E 00 19FA                01200          PER    X'00',REVELE
15B4  41 F0 1770                01201          JRT    REFUS4
15B8  9E 00 19B4                01202          PER    X'00',RESEGE
15BC  43 20 15C4                01203          JE     *+8
15C0  92 01 1A77                01204          MVI    X'01',CAER
15C4  9E 00 19B2                01205          PER    X'00',REEGOL
15C8  43 20 15D0                01206          JE     *+8
15CC  92 01 1A78                01207          MVI    X'01',CAER+1
15D0  D5 01 1A77 199A           01208          CMC    CAER,ZERO
15D6  43 20 161E                01209          JE     REVE80
15DA  02 80                     01210          LON
15DC  53 80 1610                01211          JSI    REVE77
15E0  41 F0 1910                01212          JRT    STAMP
15E4  95 01 1A77                01213          CMI    X'01',CAER
15E8  43 D0 15F6                01214          JNE    *+14
15EC  D2 07 0216 1A43           01215          MVC    CHRTS+20(8),SEGET
15F2  41 F0 0100                01216          JRT    PRINT
15F6  95 01 1A78                01217          CMI    X'01',CAER+1
15FA  43 D0 1608                01218          JNE    *+14
15FE  D2 07 0216 1A3B           01219          MVC    CHRTS+20(8),EGOLT
```

```
1604  41 F0 0100                01220            JRT    PRINT
1608  41 F0 0188                01221            JRT    JUMP
160C  41 F0 02A2                01222            JRT    HLT
1610  D7 01 1A77 1A77           01223 REVE77     XC     CAER,CAER
1616  53 80 15A8                01224            JS1    REVE75
161A  43 F0 0966                01225            JU     TAIL
161E  D5 8F 04B8 06F8           01226 REVE80     CMC    ENTRA(144),ESCE
1624  43 D0 1650                01227            JNE    REVE81
1628  D5 8F 0548 0788           01228            CMC    ENTRA+144(144),ESCE+144
162E  43 D0 1650                01229            JNE    REVE81
1632  D5 8F 05D8 0818           01230            CMC    ENTRA+288(144),ESCE+288
1638  43 D0 1650                01231            JNE    REVE81
163C  D5 8F 0668 08A8           01232            CMC    ENTRA+432(144),ESCE+432
1642  43 D0 1650                01233            JNE    REVE81
1646  02 40                     01234            LOFF
1648  53 80 15A8                01235            JS1    REVE75
164C  43 F0 1558                01236            JU     REVE99
1650  02 80                     01237 REVE81     LON
1652  53 80 15A8                01238            JS1    REVE75
1656  41 F0 1910                01239            JRT    STAMP
165A  41 F0 1880                01240            JRT    STAMPA
165E  41 F0 02A2                01241            JRT    HLT
1662  53 80 15A8                01242            JS1    REVE75
1666  43 F0 0966                01243            JU     TAIL
```

```
                                 01245          *      TRACK INDICATOR CONTROL ROUTINE

166A  D2 01 16AC 00FE            01247 BYPASS   MVC    BYPA90+2(2),254
1670  92 00 19F1                 01248          MVI    X'00',REVEA1
1674  D2 00 1B72 19F3            01249          MVC    COL(1),REVEA1+2
167A  D4 00 1B72 19A7            01250          NC     COL(1),EFFE8
1680  FE 00 1B72 19A3            01251          AB     COL,PARAM8
1686  D9 14 1B76 1B72            01252          SR     FALTI(21),COL
168C  D5 01 1BA0 00FE            01253          CMC    ALFA(2),254
1692  43 D0 16AE                 01254          JNE    BYPA90+4
1696  D9 14 1B8B 1B72            01255          SR     FALTA(21),COL
169C  D5 01 1BA2 00FE            01256          CMC    BETA(2),254
16A2  43 20 16AA                 01257          JE     BYPA90
16A6  92 02 19F1                 01258          MVI    X'02',REVEA1
16AA  43 F0 0000                 01259 BYPA90   JU     0000
16AE  D5 00 1B73 1B72            01260          CMC    CAL,COL
16B4  43 20 1558                 01261          JE     REVE99
16B8  D2 00 1B73 1B72            01262          MVC    CAL,COL
16BE  D2 1C 020C 1C46            01263          MVC    CHRTS+10(29),REVE08
16C4  D2 01 0213 1A4B            01264          MVC    CHRTS+17(2),NTEST
                                 01265          *BID7  REVEA1+1,CHRTS+28,PARAM1
16CA  41 F0 03FA                                JRT    YBID7
16CE  19F2                                      DC     AL2(REVEA1+1)
16D0  021E                                      DC     AL2(CHRTS+28)
16D2  199F                                      DC     AL2(PARAM1)
                                 01266          *BID7  REVEA1+2,CHRTS+39,PARAM2
16D4  41 F0 03FA                                JRT    YBID7
16D8  19F3                                      DC     AL2(REVEA1+2)
16DA  0229                                      DC     AL2(CHRTS+39)
16DC  19A0                                      DC     AL2(PARAM2)
16DE  92 50 0229                 01267          MVI    X'50',CHRTS+39
```

```
16E2  41 F0 0100          01268    JRT   PRINT
16E6  D2 1D 020C 1C71     01269    MVC   CHRTS+10(30),FULT
16EC  41 F0 0100          01270    JRT   PRINT
16F0  41 F0 0188          01271    JRT   JUMP
16F4  43 F0 1558          01272    JU    REVE99
```

```
                                01274          *       CAPET ERCAT ROUTINES

16F8  D2 01 1704 00FE           01276 REFUS1   MVC     *+12(2),254
16FE  41 F0 17A0                01277          JRT     ERCAPE
1702  43 20 0000                01278          JE      0000
1706  02 80                     01279          LON
1708  41 F0 1802                01280          JRT     SW1A
170C  43 F0 142E                01281          JU      POVE35
1710  41 F0 1954                01282          JRT     STEPS
1714  41 F0 17CE                01283          JRT     CAPERC
1718  41 F0 1824                01284          JRT     SW1Z
171C  43 F0 142E                01285          JU      POVE35

1720  D2 01 172C 00FE           01287 REFUS2   MVC     *+12(2),254
1726  41 F0 17A0                01288          JRT     ERCAPE
172A  43 20 0000                01289          JE      0000
172E  02 80                     01290          LON
1730  41 F0 1842                01291          JRT     SW1B
1734  41 F0 14F4                01292          JRT     STUMP
1738  41 F0 17CE                01293          JRT     CAPERC
173C  43 F0 185E                01294          JU      SW1V

1740  D2 01 174C 00FE           01296 REFUS3   MVC     *+12(2),254
1746  41 F0 17A0                01297          JRT     ERCAPE
174A  43 20 0000                01298          JE      0000
174E  02 80                     01299          LON
1750  53 80 153A                01300          JS1     REVE12
1754  41 F0 1910                01301          JRT     STAMP
1758  41 F0 17CE                01302          JRT     CAPERC
```

```
175C  41 F0 0100                01303            JRT    PRINT
1760  41 F0 0188                01304            JRT    JUMP
1764  41 F0 02A2                01305            JRT    HLT
1768  53 80 153A                01306            JS1    REVE12
176C  43 F0 0966                01307            JU     TAIL

1770  D2 01 177C 00FE           01309 REFUS4     MVC    *+12(2),254
1776  41 F0 17A0                01310            JRT    ERCAPE
177A  43 20 0000                01311            JE     0000
177E  02 80                     01312            LON
1780  53 80 15A8                01313            JS1    REVE75
1784  41 F0 1910                01314            JRT    STAMP
1788  41 F0 17CE                01315            JRT    CAPERC
178C  41 F0 0100                01316            JRT    PRINT
1790  41 F0 0188                01317            JRT    JUMP
1794  41 F0 02A2                01318            JRT    HLT
1798  53 80 15A8                01319            JS1    REVE75
179C  43 F0 0966                01320            JU     TAIL

17A0  D2 01 17CC 00FE           01322 ERCAPE     MVC    ERCAP9+2(2),254
17A6  D7 01 1A77 1A77           01323            XC     CAER(2),CAER
17AC  9E 00 19AE                01324            PER    X'00',CAPE
17B0  43 20 17B8                01325            JE     *+8
17B4  92 01 1A77                01326            MVI    X'01',CAER
17B8  9E 00 19B0                01327            PER    X'00',ERCA2
17BC  43 20 17C4                01328            JE     *+8
17C0  92 01 1A78                01329            MVI    X'01',CAER+1
17C4  D5 01 1A77 199A           01330            CMC    CAER,ZERO
17CA  43 F0 0000                01331 ERCAP9     JU     0000

17CE  D2 01 1800 00FE           01333 CAPERC     MVC    CAPER9+2(2),254
```

```
17D4  95 01 1A77          01334          CMI    X'01',CAER
17D8  43 D0 17E6          01335          JNE    *+14
17DC  D2 07 0216 1A1B     01336          MVC    CHRTS+20(8),CAPET
17E2  41 F0 0100          01337          JRT    PRINT
17E6  95 01 1A78          01338          CMI    X'01',CAER+1
17EA  43 D0 17F8          01339          JNE    *+14
17EE  D2 07 0216 1A23     01340          MVC    CHRTS+20(8),ERCAT
17F4  41 F0 0100          01341          JRT    PRINT
17F8  D7 01 1A77 1A77     01342          XC     CAER,CAER
17FE  43 F0 0000          01343 CAPER9   JU     0000
```

```
                                 01345          *      RECYCLE CONTROL ROUTINES
1802  D2 01 1818 00FE            01346 SW1A     MVC    SW1AND+2(2),254
1808  43 F0 1810                 01347          JU     *+8
180C  53 80 181A                 01348          JS1    SW1AND+4
1810  FE 10 1819 19A2            01349          AB     SW1AND(2),PARAM4(1)
1816  43 F0 0000                 01350 SW1AND   JU     0000
181A  D7 01 1A77 1A77            01351          XC     CAER,CAER
1820  43 F0 1816                 01352          JU     SW1AND
1824  D2 01 183C 00FE            01353 SW1Z     MVC    SW1NOR+2(2),254
182A  41 F0 0100                 01354          JRT    PRINT
182E  41 F0 0188                 01355          JRT    JUMP
1832  92 00 1809                 01356          MVI    X'00',SW1A+7
1836  41 F0 02A2                 01357          JRT    HLT
183A  53 80 0000                 01358 SW1NOR   JS1    0000
183E  43 F0 0966                 01359          JU     TAIL

1842  D2 01 1852 00FE            01361 SW1B     MVC    SW1UND+2(2),254
1848  43 F0 1850                 01362          JU     *+8
184C  53 80 1854                 01363          JS1    SW1UND+4
1850  43 F0 0000                 01364 SW1UND   JU     0000
1854  D7 01 1A77 1A77            01365          XC     CAER,CAER
185A  43 F0 144C                 01366          JU     REHOME+6
185E  41 F0 0100                 01367 SW1V     JRT    PRINT
1862  D2 1A 020C 1C01            01368          MVC    CHRTS+10(27),REWARN
1868  41 F0 0100                 01369          JRT    PRINT
186C  41 F0 0188                 01370          JRT    JUMP
1870  92 00 1849                 01371          MVI    X'00',SW1B+7
1874  41 F0 02A2                 01372          JRT    HLT
1878  53 80 144C                 01373 SW1NUR   JS1    REHOME+6
187C  43 F0 0966                 01374          JU     TAIL
```

```
                                 01376          *      ERROR CHRTS ROUTINES

1880  D2 01 18FE 00FE            01378 STAMPA   MVC    STAMP9+2(2),254
1886  92 00 1AF8                 01379          MVI    X'00',REVESR
188A  D2 01 18AA 1622            01380          MVC    STAMP2+4(2),REVE80+4
1890  D2 01 18CA 1620            01381          MVC    STAMP3+4(2),REVE80+2
1896  D2 05 0202 1C1C            01382 STAMP1   MVC    CHRTS(6),TOMEM
189C  92 40 020A                 01383          MVI    X'40',CHRTS+8
18A0  D2 3E 020B 020A            01384          MVC    CHRTS+9(63),CHRTS+8
18A6  D8 1F 020A 0000            01385 STAMP2   UPK    CHRTS+8(32),0000
18AC  DC 5F 020A 0040            01386          TR     CHRTS+8(96),0064
18B2  41 F0 0100                 01387          JRT    PRINT
18B6  D2 05 0202 1C22            01388          MVC    CHRTS(6),INMEM
18BC  92 40 020A                 01389          MVI    X'40',CHRTS+8
18C0  D2 3E 020B 020A            01390          MVC    CHRTS+9(63),CHRTS+8
18C6  D8 1F 020A 0000            01391 STAMP3   UPK    CHRTS+8(32),0000
18CC  DC 5F 020A 0040            01392          TR     CHRTS+8(96),0064
18D2  41 F0 0100                 01393          JRT    PRINT
18D6  41 F0 0100                 01394          JRT    PRINT
18DA  FE 00 1AF8 199F            01395          AB     REVESR(1),PARAM1(1)
18E0  95 09 1AF8                 01396          CMI    X'09',REVESR
18E4  43 D0 18F0                 01397          JNE    *+12
18E8  41 F0 0100                 01398          JRT    PRINT
18EC  41 F0 0100                 01399          JRT    PRINT
18F0  95 12 1AF8                 01400          CMI    X'12',REVESR
18F4  43 C0 1900                 01401          JL     *+12
18F8  41 F0 0188                 01402          JRT    JUMP
18FC  43 F0 0000                 01403 STAMP9   JU     0000
1900  FE 10 18AB 19A6            01404          AB     STAMP2(2),PARA20(1)
1906  FE 10 18CB 19A6            01405          AB     STAMP3(2),PARA20(1)
190C  43 F0 1896                 01406          JU     STAMP1
```

```
1910  D2 01 1952 00FE      01408 STAMP   MVC    STAM9+2(2),254
1916  D2 2A 020C 1C46      01409         MVC    CHRTS+10(43),REVE08
191C  D2 01 0213 1A4B      01410         MVC    CHRTS+17(2),NTEST
                           01411         *BID7  REVEA1+1,CHRTS+28,PARAM1
1922  41 F0 03FA                         JRT    YBID7
1926  19F2                               DC     AL2(REVEA1+1)
1928  021E                               DC     AL2(CHRTS+28)
192A  199F                               DC     AL2(PARAM1)
                           01412         *BID7  REVEA1+2,CHRTS+39,PARAM2
192C  41 F0 03FA                         JRT    YBID7
1930  19F3                               DC     AL2(REVEA1+2)
1932  0229                               DC     AL2(CHRTS+39)
1934  19A0                               DC     AL2(PARAM2)
1936  92 50 0229           01413         MVI    X'50',CHRTS+39
193A  F8 00 0234 19F0      01414         MVQ    CHRTS-109(1),REVEA(1)
1940  F8 00 0236 19F0      01415         MVQ    CHRTS-107(1),REVEA(1)
1946  FE 00 0236 199F      01416         AB     CHRTS-107(1),PARAM1(1)
194C  41 F0 0100           01417         JRT    PRINT
1950  43 F0 0000           01418 STAM9   JU     0000

1954  D2 01 1998 00FE      01420 STEPS   MVC    STEPS9+2(2),254
195A  D2 3C 020C 1BB7      01421         MVC    CHRTS+10(61),POSTEP
1960  D2 01 0213 1A4B      01422         MVC    CHRTS+17(2),NTEST
                           01423         *BID7  POVE00+1,CHRTS+24,PARAM1
1966  41 F0 03FA                         JRT    YBID7
196A  1A7B                               DC     AL2(POVE00+1)
196C  021A                               DC     AL2(CHRTS+24)
196E  199F                               DC     AL2(PARAM1)
                           01424         *BID7  POHEA1,CHRTS+44,PARAM1
1970  41 F0 03FA                         JRT    YBID7
1974  1A87                               DC     AL2(POHEA1)
```

```
1976  022E                          DC      AL2(CHRTS+44)
1978  199F                          DC      AL2(PARAM1)
                          01425     *BID7   POVE00+2,CHRTS+56,PARAM1
197A  41 F0 03FA                    JRT     YBID7
197E  1A7C                          DC      AL2(POVE00+2)
1980  023A                          DC      AL2(CHRTS+56)
1982  199F                          DC      AL2(PARAM1)
                          01426     *BID7   POVE00+3,CHRTS+68,PARAM2
1984  41 F0 03FA                    JRT     YBID7
1988  1A7D                          DC      AL2(POVE00+3)
198A  0246                          DC      AL2(CHRTS+68)
198C  19A0                          DC      AL2(PARAM2)
198E  92 50 0246          01427     MVI     X'50',CHRTS+68
1992  41 F0 0100          01428     JRT     PRINT
1996  43 F0 0000          01429 STEPS9  JU  0000
```

```
199A  0000
199C  000001
199F  01
19A0  02
19A1  03
19A2  04
19A3  08
19A4  09
19A5  10
19A6  20
19A7  F8
19A8  C02E
19AA  C012
19AC  C014
19AE  C01E
19B0  C042
19B2  C008
19B4  C003
19B6  50 4A 0001 1A7A
19BC  50 4A 0001 19C2
19C2  0101
19C4  50 46 0002 19CA
19CA  040000
19CD  10 40 0002 19D3
19D3  000000
19D6  50 46 0002 19DC
19DC  080000
19DF  10 40 0002 19E5
19E5  000000
19E8  50 46 0002 19EE
19EE  000000
19F1  000000

01432 ZERO      DC    XL2'0000'
01433 ZERO2     DC    XL3'000001'
01434 PARAM1    DC    XL1'01'
01435 PARAM2    DC    XL1'02'
01436 PARAM3    DC    XL1'03'
01437 PARAM4    DC    XL1'04'
01438 PARAM8    DC    XL1'08'
01439 PARAM9    DC    XL1'09'
01440 PARA16    DC    XL1'10'
01441 PARA20    DC    XL1'20'
01442 EFFE8     DC    XL1'F8'
01443 TOP001    DC    XL2'C02E'
01444 POTESE    DC    XL2'C012'
01445 POMARE    DC    XL2'C014'
01446 CAPE      DC    XL2'C01E'
01447 ERCA2     DC    XL2'C042'
01448 REEGOL    DC    XL2'C008'
01449 RESEGE    DC    XL2'C003'
01450 POSIZI    DP    X'50',X'4A',POVE00(2)
01451 POSAV     DP    X'50',X'4A',POSAVA(2)
01452 POSAVA    DC    XL2'0101'
01453 POINDI    DP    X'50',X'46',POINDR(3)
01454 POINDR    DC    XL3'040000'
01455 POLEGE    DP    X'10',X'40',POHEAD(3)
01456 POHEAD    DC    XL3'000000'
01457 READDR    DP    X'50',X'46',READD1(3)
01458 READD1    DC    XL3'080000'
01459 RELEGE    DP    X'10',X'40',POHEAR(3)
01460 POHEAR    DC    XL3'000000'
01461 REVEAD    DP    X'50',X'46',REVEA(3)
01462 REVEA     DC    XL3'000000'
01463 REVEA1    DC    XL3'000000'
```

```
19F4  50 42 023F 04B8          01464 REVERE     DP     X'50',X'42',ENTRA(576)
19FA  10 40 023F 06F8          01465 REVELE     DP     X'10',X'40',ESCE(576)
1A00  10 40 009F 00B6          01466 LETE       DP     X'10',X'40',LETT+100
1A06  50 46 0002 1A0C          01467 INTE       DP     X'50',X'46',TETE(3)
1A0C  080000                   01468 TETE       DC     XL3'080000'
1A0F  8045                     01469 RESET      DC     XL2'8045'
1A11  8047                     01470 RETHOM     DC     XL2'8047'
1A13  A7554040B35040AC         01471 PEOOT      DC     CL8'PEOOT 0*'
1A1B  5351A755B35040AC         01472 CAPET      DC     CL8'CAPET 0*'
1A23  55A95351B35040AC         01473 ERCAT      DC     CL8'ERCAT 0*'
1A2B  A451A955B35040AC         01474 MARET      DC     CL8'MARET 0*'
1A33  B355B255B35040AC         01475 TESET      DC     CL8'TESET 0*'
1A3B  5557A6A3B35040AC         01476 EGOLT      DC     CL8'EGOLT 0*'
1A43  B2555755B35040AC         01477 SEGET      DC     CL8'SEGET 0*'
1A4B  4040                     01478 NTEST      DC     XL2'4040'
1A4D  404140424043404 4        01479 TESTS      DC     CL40'01020304050607080910111213141516171819'
      40454046404740 48   4049414041414142   4143414441454146   4147414841495050

1A75  0050                     01480 ALLETT     DC     AL2(LETT-2)
1A77  0000                     01481 CAER       DC     XL2'0000'
1A79                           01482 PARAMS     DS     L1
1A7A  00000000                 01483 POVE00     DC     XL4'00000000'
1A7E  00                       01484 POVE05     DC     XL1'00'
1A7F  000000                   01485 POVE06     DC     XL3'000000'
1A82                           01486 TOOS00     DS     L1
1A83                           01487 CATEPS     DS     L4
1A87  00                       01488 POHEA1     DC     XL1'00'
1A88  00                       01489 RADPO1     DC     XL1'00'
1A89  00                       01490 RADPO2     DC     XL1'00'
1A8A  64875B30680854C4         01491 RADPOS     DC     XL20'64875B30680854C45D199F195D2C80A8796F694A'
      5D199F195D2C80A8   796F694A
```

```
1A9E  611488352 3B19576          01492              DC     XL20'611488352 3B19576363E89B86E59B0AEA5B15002'
      363E89B86E59B0AE   A5B15002

1AB2  1A8B628E91C8407D           01493              DC     XL20'1A8B628E91C8407D6F1480A5489A65A257A81D78'
      6F1480A5489A65A2   57A81D78

1AC6  372C7CC05995C538           01494              DC     XL20'372C7CC05995C5382C90C053746AB7C99FBBC311'
      2C90C053746AB7C9   9FBBC311

1ADA  95C2486C0F3258A2           01495              DC     XL20'95C2486C0F3258A2C91903BA4136AB81C0746304'
      C91903BA4136AB81   C0746304

1AEE                             01496 POVE01       DS     L2
1AF0  1A8B                       01497 RADPA1       DC     AL2(RADPOS+1)
1AF2  1A8A                       01498 RADPA2       DC     AL2(RADPOS)
1AF4                             01499 REVEST       DS     L1
1AF5  90                         01500 REVENO       DC     XL1'90'
1AF6  0120                       01501 REVEDO       DC     XL2'0120'
1AF8                             01502 REVESR       DS     L1
1AF9  1B61                       01503 AT1703       DC     AL2(T17003)
1AFB  1B48                       01504 AT1710       DC     AL2(T17001+1)
1AFD  1B47                       01505 AT1701       DC     AL2(T17001)
1AFF  FBEFBE041041FFFF           01506 PTTERN       DC     XL18'FBEFBE041041FFFFFF6DB6DBDB6DB6878558'
      FF6DB6DBDB6DB687   8558

1B11  FFFFFE29CBDF2482           01507              DC     XL18'FFFFFE29CBDF2482780010010000000555555'
      7800100100000055   5555

1B23  AAAAAA878558EE75           01508              DC     XL18'AAAAAA878558EE7518118AE71E1AA0878570'
      18118AE71E1AA087   8570

1B35  EE7518118AE71E1A           01509              DC     XL18'EE7518118AE71E1AA0878558EE75181E1AA0'
      A0878558EE75181E   1AA0
```

```
1B47  C600C5CAC7CA0800          01510 T17001     DC     XL11'C600C5CAC7CA080007CA09'
      07CA09

1B52  0008CA09000700C6          01511            DC     XL12'0008CA09000700C6CAC700C5'
      CAC700C5

1B5E  F1CACA                    01512 T17002     DC     XL3'F1CACA'
1B61  55AAAA55AAAA55AA          01513 T17003     DC     XL12'55AAAA55AAAA55AAAA55AAAA'
      AA55AAAA

1B6D  00FF55AA                  01514 T14PAR     DC     XL4'00FF55AA'
1B71                            01515 T14PRM     DS     L1
1B72                            01516 COL        DS     L1
1B73                            01517 CAL        DS     L1
1B74  1B6D                      01518 AL14PA     DC     AL2(T14PAR)
1B76  0000000000000000          01519 FALTI      DC     21XL1'00'
      0000000000000000    0000000000

1B8B  0000000000000000          01520 FALTA      DC     21XL1'00'
      0000000000000000    0000000000

1BA0  1B8B                      01521 ALFA       DC     AL2(FALTI+21)
1BA2  1BA0                      01522 BETA       DC     AL2(FALTA+21)
1BA4  1B76                      01523 ALFO       DC     AL2(FALTI)
1BA6  1B8B                      01524 ALFU       DC     AL2(FALTA)
1BA8                            01525 PASSI      DS     L1
1BA9  0F                        01526 ZEROF      DC     XL1'0F'
1BAA  02AA                      01527 ALUD1      DC     AL2(UDISC1)
1BAC  02AB                      01528 ALUD2      DC     AL2(UDISC2)
1BAE  1BAA                      01529 ALLUD1     DC     AL2(ALUD1)
1BB0  1BAC                      01530 ALLUD2     DC     AL2(ALUD2)
1BB2  04B8                      01531 ALENT1     DC     AL2(ENTRA)
```

```
1BB4  06F8                    01532 ALESCE     DC     AL2(ESCE)
1BB6                          01533 INVERT     DS     L1
1BB7  B355B2B350A55B50        01534 POSTEP     DC     CL41'TEST N.     N.    STEPS FROM CY.N.    TO '
      50505050A55B5050   5050B2B355A7B250   56A9A6A45053B85B   A55B50505050B3A6   50

1BE0  53B85BA55B505050        01535            DC     CL20'CY.N.     HEAD N.   '
      505058555154 50A5  5B505050

1BF4  55A9A9A6A95B5056        01536 POERRO     DC     CL13'ERROR. FOUND:'
      A6B4A5544D

1C01  595650B2B641BBA9        01537 REWARN     DC     CL27'IF SW1,RET.TO HOME IN CYCLE'
      55B35BB3A65058A6   A4555059A55053B8   53A355

1C1C  B3A650A455A4            01538 TOMEM      DC     CL6'TO MEM'
1C22  59A550A455A4            01539 INMEM      DC     CL6'IN MEM'
1C28  55A9A95B5059A550        01540 ERRRET     DC     CL30'ERR. IN RET.TO HOME FROM CY.N.'
      A955B35BB3A65058   A6A4555056A9A6A4   5053B85BA55B

1C46                          01541 REVE08     DC     CL43'TEST N.     CY.N.    HEAD N.    SECT.N.0'C
      B355B2B350A55B50        01542                   ',0'
      505050505053B85B   A55B505050505855   515450A55B505050   50B25553B35BA55B   40BB40

1C71  5651B4A3B3B850B3        01543 FULT       DC     CL30'FAULTY TRACK.READ-WRITE BYPASS'
      A95153A25BA95551   54AAB6A959B35550   52B8A751B2B2

1C8F  54B2B4                  01544 UD         DC     CL3'DSU'
```

```
                                01546          *      PERIPHERAL COMPILATION ROUTINE

1C92  D2 01 1CB8 00FE           01548 COMPER   MVC    COMPE4+4(2),254
1C98  D2 01 1CA6 00FE           01549          MVC    COMPE1+4(2),254
1C9E  43 F0 1CAE                01550          JU     COMPE3
1CA2  D2 01 1CAA 0000           01551 COMPE1   MVC    COMPE2+2(2),0000
1CA8  D2 00 0000 02AA           01552 COMPE2   MVC    0000(1),UDISC1
1CAE  FE 10 1CA7 19A0           01553 COMPE3   AB     COMPE1(2),PARAM2
1CB4  D5 01 1CA6 0000           01554 COMPE4   CMC    COMPE1+4(2),0000
1CBA  43 D0 1CA2                01555          JNE    COMPE1
1CBE  D2 01 1CC6 1CA6           01556          MVC    COMPE5+2(2),COMPE1+4
1CC4  43 F0 0000                01557 COMPE5   JU     0000

                                01559          *      ORDER ROUTINE

1CC8  D2 01 1CF2 00FE           01561 ALARM    MVC    ALLARM+2(2),254
1CCE  D2 15 0219 1CF4           01562 TARA01   MVC    CHRTS+23(22),ALARM1
1CD4  41 F0 0100                01563          JRT    PRINT
1CD8  D2 14 0219 1D0A           01564          MVC    CHRTS+23(21),ALARM2
1CDE  41 F0 0100                01565          JRT    PRINT
1CE2  D2 16 0219 1D1F           01566          MVC    CHRTS+23(23),ALARM3
1CE8  41 F0 0100                01567          JRT    PRINT
1CEC  41 F0 0100                01568          JRT    PRINT
1CF0  43 F0 0000                01569 ALLARM   JU     0000
1CF4  59A5B255A959A955          01570 ALARM1   DC     CL22'INSERIRE SK. PARAMETRO'
      50B2A25B50A751A9   51A455B3A9A6

1D0A  59A5B255A9B350A7          01571 ALARM2   DC     CL21'INSERT PARAMETER CARD'
      51A951A455B355A9   505351A954
```

```
1D1F  59A5B255A955A950          01572 ALARM3     DC      CL23'INSERER CARTE PARAMETRE'
      5351A9B35550A751   A951A455B3A955


                                01575            *       SUBWAIT SUBROUTINE


1D36                            01577 WAIT       DS      L2
1D38  0000                      01578 WATT       DC      XL2'0000'
1D3A  01                        01579 WAIT01     DC      XL1'01'
1D3C  D2 01 1D36 1D38   P       01580 SUBWAT     MVC     WAIT,WATT
1D42  D2 01 1D64 00FE           01581 SUBWAY     MVC     WAITZ+2(2),254
1D48  02 20                     01582            INS
1D4A  D2 00 1D51 00F3           01583            MVC     WAIT1+1(1),TEMUC
1D50  D2 00 0000 0000           01584 WAIT1      MVC     0000(01),0000
1D56  FF 10 1D37 1D3A           01585            SB      WAIT(2),WAIT01(1)
1D5C  43 10 1D42                01586            JG      SUBWAY
1D60  02 10                     01587            ENS
1D62  43 F0 0000                01588 WAITZ      JU      0000
1D66  0600                      01589 ATT        DC      XL2'0600'
1D68                            01590 TAILOA     DC      CL71'PER RIPETERE IL GRUPPO DI PROVE PRESCELTE'C
      A755A950A959A755          01591                    '. PREMERE ''''SW.2''''' E ''''START'''''
      B355A9555059A350   57A9B4A7A7A65054   5950A7A9A6B55550   A7A955B25355A3B3   55BB50A7A955A455
      A95550AFAFB2B65B   42AFAF505550AFAF   B2B351A9B3AFAF

1DAF                            01592 TAILOB     DC      CL71'PER PROVARE UN NUOVO GRUPPO DI PROVE '    C
      A755A950A7A9A6B5          01593                    ' INSERIRE UNA NUOVA SK. PARAMETRO,'
      51A95550B4A550A5   B4A6B5A65057A9B4   A7A7A650545950A7   A9A6B555505059A5   B255A959A95550B4
      A55150A5B4A6B551   50B2A25B50A751A9   51A455B3A9A6BB
```

```
1DF6                        01594 TAILOC     DC     CL53'METTERE IL LETTORE IN ''''OPERATE'''' E ' C
     A455B3B355A95550       01595                   'PREMERE ''''START'''''
     59A350A355B3B3A6  A9555059A550AFAF  A6A755A951B355AF  AF505550A7A955A4  55A95550AFAFB2B3
     51A9B3AFAF

1E2B                        01596 TAILOD     DC     CL63'TO REPEAT THE CHOSEN SET OF TESTS  PRESS 'C
     B3A650A955A75551       01597                   '''''SW.2'''' AND ''''START'''''
     B350B35855505358  A6B255A550B255B3  50A6565 0B355B2B3  B25050A7A955B2B2  50AFAFB2B65B42AF
     AF5051A55450AFAF  B2B351A9B3AFAF

1E6A                        01598 TAILOE     DC     CL55'TO TRY A NEW SET OF TESTS  INSERT A NEW ' C
     B3A650B3A9B85051       01599                   'PARAMETER CARD,'
     50A555B650B255B3  50A6565 0B355B2B3  B2505059A5B255A9  B3505150A555B650  A751A951A455B355
     A9505351A954BB

1EA1                        01600 TAILOF     DC     CL49'PUT THE READER IN ''''OPERA'              C
     A7B4B350B3585550       01601                   'TE'''' AND PRESS ''''START'''''
     A955515455A95059  A550AFAFA6A755A9  51B355AFAF5051A5  5450A7A955B2B250  AFAFB2B351A9B3AF
     AF

1ED2                        01602 TAILOG     DC     CL70'POUR REPETER LE GROUPE DE TESTS CHOISIS  'C
     A7A6B4A950A955A7       01603                   'PRESSER ''''SW.2'''' ET ''''START'''''
     55B355A950A35550  57A9A6B4A7555054  5550B355B2B3B250  5358A659B259B250  50A7A955B2B255A9
     50AFAFB2B65B42AF  AF5055B350AFAFB2  B351A9B3AFAF

1F18                        01604 TAILOH     DC     CL66'POUR ESSAYER UN NOUVEAU GROUPE DE TESTS'  C
     A7A6B4A95055B2B2       01605                   ' INSERER UNE NOUVELLE CARTE'
     51B855A950B4A550  A5A6B4B55551B450  57A9A6B4A7555054  5550B355B2B3B250  59A5B255A955A950
     B4A55550A5A6B4B5  55A3A3555053 51A9  B355

1F5A                        01606 TAILOI     DC     CL65'PARAMETRE, PLACER LE LECTEUR SUR ''''OPE' C
     A751A951A455B3A9       01607                   'RATE'''' ET PRESSER ''''START'''''
```

```
      55BB50A7A3515355   A950A35550A35553   B355B4A950B2B4A9   50AFAFA6A755A951   B355AFAF5055B350
      A7A955B2B255A950   AFAFB2B351A9B3AF   AF

1F9B  B0404040                 01608 MODE80     DC     CL4'+000'
1F9F  B0424043                 01609 MODE81     DC     CL4'+203'
1FA3  AA404042                 01610 MODE82     DC     CL4'-002'
1FA7  B0424042                 01611 MODE83     DC     CL4'+202'
1FAB  B0424048                 01612 MODE84     DC     CL4'+208'
1FAF  AA404041                 01613 MODE85     DC     CL4'-001'
1FB3  B355B255B35050AC         01614 MODE01     DC     CL20'TESET  * CY. N. 0000'
      5053B85B50A55B50   40404040

1FC7  50 4A 0001 1FDF          01615 POSM1      DP     X'50',X'4A',A(2)
1FCD  50 4A 0001 1FE1          01616 POS202     DP     X'50',X'4A',B(2)
1FD3  50 4A 0001 1FE3          01617 POS1       DP     X'50',X'4A',C(2)
1FD9  50 4A 0001 1FE5          01618 POS5       DP     X'50',X'4A',D(2)
1FDF  0001                     01619 A          DC     XL2'0001'
1FE1  01CA                     01620 B          DC     XL2'01CA'
1FE3  0101                     01621 C          DC     XL2'0101'
1FE5  0105                     01622 D          DC     XL2'0105'
1FE7  0000                     01623 MODISC     DC     XL2'0000'
1FE9  B355B2B350A55B50         01624 SEEIN      DC     CL28'TEST N. 019  SEEK INCOMPLETE'
      4041495050B25555   A25059A553A6A4A7   A355B355

001E                     M     01625          ORG    30
001E  087A                     01626          DC     AL2(START2)
                               01627          *      4T4720409GA0 4720410S  MARGINING  TEST  M157
      43 F0 10DE               01628          END    START
```

Honeywell
Honeywell Information Systems Italia

DSS 157 DISC MONITOR
1ª APPLIC. 100 LINE

CONT. SU FO. 3 FO. 1

DESCRIPTION		LISTING		CARD	VARIOUS	APPR.
4T4720701C	A0	4T4720709E	A0	4720710 Y	/	3-XII-71-CM

NOTE

COPIE A: TO:
IND. REV.
REVISION

COMPIL. C.MONDUCCI/aa	APPR. CM.	UNIT SEZ. SEC. S.P.S.-HISI	N: 4T4720701CA0
EMISS. Mar. 29,1971		LOC. Pregnana	CONT. SU FO. 3 FO. 1

Cod. 3896161 D

INDEX

CHAPTER 1	SUMMARY OF THE OPERATING PROCEDURES	page	5
1.1.	Minimum center configuration	"	5
1.2.	Subsystem in object	"	5
1.3.	Summary of the operations required to run the diagnostic	"	7
1.4.	HLT list	"	9
1.5.	Notes on the parameter card	"	11
1.6.	Parameter card format	"	13
CHAPTER 2	OPERATING PROCEDURES	"	23
2.1.	General	"	23
2.2.	Validity field	"	25
2.3.	Diagnostic medium	"	27
2.4.	Disc unit and magnetic medium used	"	29
2.5.	Operating procedures	"	31
2.6.	General information on error indication	"	41
CHAPTER 3	PROGRAM DESCRIPTION	"	45
3.1.	Headers or data transfer	"	47
3.2.	Formatting	"	51
3.3.	Repeated seeks	"	53
3.4.	Seek and wait	"	57

CHAPTER 1 SUMMARY OF THE OPERATING PROCEDURES

1.1. Minimum center configuration

CPU :

G 130
G 120

Serial or parallel reader
Parallel or serial printer

1.2. Subsystem in object

The DSS 157 DISC MONITOR can be used in magnetic disc subsystems consisting of :

Controller DSC 157
DSU 167

1.3. Summary of the operations required to run the diagnostic

- Tool the printer
- Press CLEAR on CPU
- Empty the feeding track of the reader
- Set the diagnostic card deck on the reader and press "OPERATE" (if the reader is a LP 300 B it is necessary to put 2 blank cards at the end of the deck).
- Press LOAD and START on CPU.
- While the program cycles with OPERATOR CALL lit, perform the passage OUT-OF-SERVICE-AUTOMATIC operating on the panel of the printer.
- After the first group of prints, do what they request.
- To the printing requiring to set in AUTOMATIC the chosen disc unit turn on the unit operating on the console switch START.
- Follow the printing and operate as required.
- The program loaded, to the printing requiring the insert of the parameter card :

  - Take the card deck off the output stacker
  - Do what the printing requests.

- The required test finished, the program reaches an HLT
  If START is pressed, without SWITCH2 being inserted, the program calls for a new parameter card.

1.4. HLT List

1.4.1. Operating HLT'S

10F0 HLT
11C4 HLT
09BC HLT
0EAE HLT

Do the operations indicated on the printer

1.4.2. Error HLT'S

HLT	MEANING	OPERATIONS TO BE PERFORMED
HLT 0025	Card reading error during program loading	Reset the card; CLEAR (CPU) OPERATE (Reader), START (CPU)
HLT 0FEC (OPERATOR CALL - lit)	The printer does not run the passage AUT-OF-SERVICE/AUTOMATIC within about 3 minutes	Pressing START on CPU, the search is tried again
HLT 0280 (OPERATOR CALL - lit)	Printer in STAND-BY or in OUT-OF-SERVICE	Set the printer in AUTOMATIC and press START on CPU
HLT 0932 (OPERATOR CALL - lit)	Card reader in STAND - BY	Set the reader in AUTOMATIC and press START on CPU
HLT 091E (OPERATOR CALL - lit)	Parameter card reading error	Reset the card; press OPERATE on reader, START on CPU
HLT 0944	The automatic search of the name of chosen DSU has not worked automatically	Do the operations given on the printer
HLT 1210 (OPERATOR CALL - lit)	ERROR HLT of the program	Check the printings; inserting SWITCH1 and pressing START, the operation which has signaled ERROR is repeated. Pressing START only, the diagnostic goes to the test end

1.5. Notes on the parameter card

By means of the parameter card all the informations concerning the operation to be done are given the machine.
The card can be punched in IBM code, BULL code or in the exadecimal one.

Example:

Characters E and F can be punched indifferently in one of these ways :

Character	E	punch	5 - 12	(IBM)
		"	7 - 3	(BULL)
		"	8 - 6	(Exadecimal)
Character	F	punch	6 - 12	(IBM)
		"	7 - 4	(BULL)
		"	8 - 7	(Exadecimal)

In the case of a parallel reader the flow of the parameter cards must be followed by two blank cards.
Such a flow may consist of one or more parameter cards depending whether a test or a sequence of tests is to be performed, with the recycle possibility, through SWITCH2, on each one of these.

1.6. Parameter card format

1.6.1. Headers transfer

Column.	Meaning	Punch
1	8 mode	0
2	headers	1
3, 4, 5	cylinder	cylinder number(decimal)
6, 7	head	head number (decimal)
8	sector	0
9	operation	0 : read 2 : write E : verify
10-79	-	blank
80	monitoring	blank : print if error 0 : print always

1.6.2. Data transfer

Column	Meaning	Punch
1	mode	0 : 8 mode 1 : 6 mode
2	data	0
3 4 5	cylinder	cylinder number (decimal)
6 7	head	head number (decimal)
8	sector	sector number
9	operation	0 : read 2 : write E : verify
10 11 12 13 14	memory address	transfer starting address (decimal) (grater then 06200)
15 16 17 18	lenght	transfer lenght (decimal)
19-79	-	blank
80	monitoring	blank : print if error 0 : print always

1.6.3. Disc formatting

Column	Meaning	Punch
1		0
2		1
3		0
4		0
5		0
6	Format the	0
7	disc	0
8		0
9		2
10-14		blank
15		F
16-80		blank

1.6.4. Repeated seeks

Column	Meaning	Punch
1-34	-	blank
35	check	blank : check the seek to be performed 0 : no check required
36-39	-	blank
40 41 42	starting cylinder	cylinder number (decimal)
43-44	-	blank
45 46 47	cylinder to be reached	cylinder number (decimal)
48-49	-	blank
50 51 *	check the performed seek with the head	head number (decimal) (if blank : head 0)

* only if a blank is left in col. 35.

1.6.5. Seek and Wait (Cylinder Pulse Adjustement)

Column	Meaning	Punch
1-34	-	blank
35	check	0
36-39	-	blank
40	seek lenght	0
41		0
42		1
43-80	-	blank

CHAPTER 2 OPERATING PROCEDURES

2.1. General

The program DSS 157 DISC MONITOR can perform, on indication given by parameter card, the following operations:

- Headers transfers - parametrical with respect the cylinder, head and transfer type (read, write, verify).
- Data transfers - Parametrical with respect to the cylinder, head, sector transfer mode (6 or 8 bit) and type (read, write, verify) transfer lenght and transfer starting address.
- Formatting
- Repeated seeks parametrical with respect the starting cylinder, and the cylinder to be reached. Options in given to check the seek performed by reading of the home address of a chosen track of the cylinder.
- Seek and wait This operation is needed for the Cylinder Pulse.

The program offers the capabilities of recycle typical of the diagnostic programs.

2.2. Validity field

The disc subsystem must be connected to a G 130 or G 120 central processor.
It may be connected either directly to a standard CPU connector or after a multiperipheral adapter.
The minimum capacity of the central processor must be 8K.
The input device for the diagnostic program may be either a serial reader which must be connected to connector 2 of the CPU or a parallel reader which must be connected to connector 4.
Both the types of card readers, independently from the type of trascoder, must plan for the by-pass reading.
The type of disc handler planned is DSU 167.
The printer (which must be always present) may be serial or parallel and connected to standard or integrated controller.

2.3. Diagnostic medium

2.3.1. Preliminary operations

Extract the first and last card from diagnostic medium. The first card - title card - carries the diagnostic program name.
The last card - summary card - is used when check - up of medium integrity by means of the "Control Program " is required (see pertinet documentation). Check-up must be conducted on the whole medium, excluding the first card only).
The first four cards of the remaining medium act as four different loaders. Pick out the one to be employed as useful loader according to system characteristics and left as front card of the medium.
When selecting the loading-card remember that :

- The card with punching 8 in column 3 is the suitable loader for serial readers with Hollerith code decoder linked through connector 2;
- The card with punching 4 in column 3 is the suitable loader for serial readers with Hollerith code decoder linked through connector 4;
- The card with punching 9 in column 3 is the suitable loader for serial readers with Bull code transcoder linked through connector 2;
- The card with punching 3 in column 3 is the suitable loader for parallel readers with Bull code decoder linked through connector 4.

- Remember that the cards extracted from the deck according to what see above must be filed and easily available.

2.4. Disc unit and magnetic medium used

The diagnostic program uses a disc unit set in AUTOMATIC, which is used to run the whole diagnostic.
The informations headers and data present on disc may be altered during the performance of the program.

2.5. Operating procedures

NOTE

In the following paragraph and in the subsequent ones, terms are used, which, in order not to misunderstand them, will be briefly summarized below :

- to indicate the insertion (or release) of a bistable switch on the CPU panel, the name of the switch is given preceded by SET (or RESET) or INSERT (or RELEASE);
- to indicate a light signal, the name of the lamp is given = 1 or = 0, respectively if the lamp is on or off.

2.5.1. Preliminary operations

a) Empty the feeding track of the input device: operating on the related panel.

b) On the CPU panel, perform, in the order, the following operations :

- set LOAD1 or LOAD2 depending whether the input device is connected to connector 2 or to connector 4 of CPU;
- press CLEAR.

c) Set on the hopper the card deck forming the diagnostic and do :

- If serial reader (LS600) it is advisable to set the STOP condition (lamp on) in order to avoid to mix the card and then press ON and subsequently OPERATE.
- If parallel reader press ON, then press the push-button PUNCH (P) so that the lamp stays off. Then press OPERATE checking visually that the feeding of the first card occurs correctly.

d) On the CPU panel press, then, LOAD-START.

2.5.2. Program running

The program, because of memory occupation reasons, has been divided in 2 sections. Each section is progressively introduced in memory and run. It is not possible to recycle on the whole diagnostic but the recycle is possible on every single section by means of the use of SWITCH2.

2.5.2.1. Search for the name of the printing unit

After having introduced the first section of the program, the program is set in a cycle with OPERATOR CALL lit, to establish the printer name.
In order to continue the performance, the operations must be the following:

- if the printing device is already in the AUTOMATIC status, operate on the related panel to perform the passage from AUTOMATIC to OUT-OF-SERVICE, and from OUT-OF-SERVICE to AUTOMATIC.
- If the printing device is in the MANUAL or OUT-OF-SERVICE status, operate on the related panel to perform the passage to the AUTOMATIC status.

Should the operations mentioned above not be done or should the passage OUT-OF-SERVICE/AUTOMATIC of the printer not work, the program execution does not continue and after about 3 minutes an HLT is reached.
In this case, pressing START, the printer name search cycle is repeated.
If the malfunction persists, it is necessary to proceed to repair the printer as it is impossible to continue the program execution.

2.5.2.2. Notice prints

After having assumed the name of the printer the program performs the following prints:

1) TAKE OFF BOARD A20 ON GUD 040
2) SET OFF ALL THE DISK UNITS
3) LOAD A DISC ON THE CHOSEN UNIT
4) PRESS "START"

After these prints the program stops at an HLT. Only when all the operations have been accomplished, proceed pressing START on CPU.

2.5.2.3. Search for the DSU name

The search for the unit name is done automatically by the program.
In fact, after having given on printer the following order:

SET IN AUTOMATIC THE CHOSEN DISC UNIT,

it passes to a program cycle which examines progressively all the possible names of the unit under test. The name which is taken is the one corresponding to the unit which, between one cycle and the following one, shows the passage from the OUT-OF-SERVICE or MANUAL STATUS to the AUTOMATIC one.
If the unit name search fulfills the above mentioned condition, the program is continued (see printing of the name of the disc handler under test).
However there are, some failures (selection network and decoding of unit name, malfunctions in the signal of MARE or SECO, etc.) which do not allow the automatic search of unit name.

In this case the program, after having cycled for a maximum time of about 3', runs the following prints :

THE AUTOMATIC SEARCH OF DISC UNIT NAME DIDN'T WORK; IF THE UNIT NAME IS "OX" INSERT "SW.1" AND PRESS "START", OTHERWISE "START".

The operator must perform what requested from printer. Let's set for example that the name of the unit under test is 10. The sequence of the prints occurs in the following way :

IF THE UNIT NAME IS "1X" INSERT "SW.1" AND PRESS "START", OTHERWISE PRESS START.

At this point, the operator must insert SWITCH1. These prints will follow :

RELEASE "SW.1"
IF THE UNIT NAME IS "10" INSERT SWITCH1 AND PRESS "START", OTHERWISE PRESS "START".

As said, the unit under test has the name 10 and then the operator, checked the coincidence between the printing and the real name, will insert again SWITCH1 and will press START.
The following prints will be :

RELEASE "SW.1"
THE NAME OF THE UNIT IS 10.

This last printing is reached directly if the unit name search works automatically.
After having determined the DSU name the following print occurs:

CHECK THE PRINTINGS. IF CORRECT PRESS "START" TO RECYCLE PRESS "SW.2" AND "START".

and the program reaches the HLT.
After having checked if all the prints made are correct,

press START, otherwise inserting SWITCH2 and pressing START, the section is repeated (the search for the printer name is excluded from the recycle).

REMARK : FROM THIS POINT ONWARD, IF, FOR SOME REASON THE PRINTER IS SET IN OUT OF SERVICE OR IN STAND BY, PRINTINGS ARE BY PASSED. THEY ARE ALLOWED WHEN THE PRINTER IS SET AGAIN IN OPERATE; IN THIS CASE, HOWEVER, WHEN THE FIRST PRINTING IS ACCOMPLISHED, SOME IMPROPER CHARACTERS MAY APPEAR.

2.5.4. Test running

At the end of the program loading the following printing appears:

INSERT PARAMETER CARD
PUT THE READER IN "OPERATE", THEN PRESS "START"

and the program reaches an HLT
At this point it is necessary :

- to check whether the feed track is empty.
- to take the diagnostic deck from the output stacker in order to avoid mixing the diagnostic deck cards with the parameter ones.
  Insert the parameter card punched as seen in para.1.5., put the reader in OPERATE and press START.

The program runs the chosen test.
When the test is run the following printing appears:

TO CYCLE OVER THIS TEST PRESS "SW.2" THEN "START" OTHERWISE
INSERT PARAMETER CARD
PUT THE READER IN "OPERATE" THEN PRESS "START"

and the program reaches an HLT
If SWITCH2 is inserted, pressinf START, the program runs continuosly the chosen test.
To run a new test insert a new parameter card in the reader, put the same in OPERATE and press START.

2.6. General information on error indications

The error signal occurs through printing and the program stops at an HLT with OPERATOR CALL lit.
Pressing START the program run is continued.
Inserting SWITCH1 and pressing START there is the repetition of the operation which has signaled error.
Such operation is repeated continuosly until SWITCH1 is not released.
The stop on HLT and the error signal printings are avoided in case of recycle on SWITCH1.

NOTE : The value 0 or 1 printed beside the name of the signal examined, indicates the situation of the signal itself to the interface:

0 = condition present (signal electrically low on the interface)

1 = condition not present (signal electrically high on the interface)

The signals with * are the causes of error.

2.6.1. Print because of data operation error.

CYLINDER 025, HEAD 02, SECTOR 00, READ DATA

ERCAT = 1
IGOLT = 1
CAPET = 1
MARET = 0 *
EGOLT = 1
FISET = 1
SEGET = 1

0D710D11D20000000000000000000000

Interpretation :

The operation just performed is a 16 chrts data reading, cylinder 025, head 02, sector 00.
The anomalous condition MARET=0 has occurred.
The 16 characters printed are the contents of the CPU input field at the end of the transfer.

2.6.2. Print because of headers operation error

CYLINDER 023, HEAD 17, SECTOR 00, WRITE HEADERS

ERCAT 1
CAPET 1
MARET 0 *

0417B80417B8082F70082F71082F72082F73082F74082F75082F76082F77082F78082F790

The operation just performed is a header writing cylinder 023 head 17.
The anomalous condition MARET=0 has occurred.
The characters printed are the contents of the CPU output field at the end of the transfer.

2.6.3. Print because of seek error

N.133 STEPS FROM CY.N.189 TO CY.N.056 HEAD N.16
ERROR FOUND : CY.N.057 HEAD N.16

A seek 133 steps long from cylinder 189 to cylinder has reached the cylinder 157. The cylinder reached has been checked by means of the reading of the home address of the track 16.

CHAPTER 3 PROGRAM DESCRIPTION

The program has been subdivided in two sections in the first of which preliminary operations are made in order to ascertain the center configuration. (Printer name , DSU name).
In the second section the program performs the following operations :

- It reads and interprets the parameter card
- It performs the required operations which can be:
  - Headers or data transfer (writing, reading verifying)
  - Formatting
  - Repeated seeks
  - Seek and wait

3.1. Headers or data transfer

First a Return to Home is performed, then a positioning to the chosen cylinder occurs.

3.1.1. Headers transfer

The transfer is 36 characters long.
The CPU output/input fields are at the addresses :

- 0780 in case of writing or verifying
- 17D8 in case of reading

3.1.2. Data transfer

The transfer length is parametric (max. 9999 characters). The memory field address concerned with the operation is also parametric. However it is not advisable to involve memory addresses smaller than 06200 to avoid the risk of altering the program itself.
The operation is tried assuming the track as good.
If a the condition IGOLT=0 occurs the operation is re - tried assuming the track as alternative.
If the condition persists a signal error is printed out.

3.1.3. Once the transfer is over, these checks are made :

- Write headers

  MARET = 1
  CAPET = 1
  ERCAT = 1

- Verify headers

  SEGET = 1
  MARET = 1
  CAPET = 1
  ERCAT = 1

- Read headers

  SEGET = 1
  MARET = 1
  CAPET = 1
  ERCAT = 1

- Write data

  FISET = 1
  EGOLT = 1
  MARET = 1
  CAPET = 1
  IGOLT = 1
  ERCAT = 1

- Verify data

  SEGET = 1
  FISET = 1
  EGOLT = 1
  MARET = 1
  CAPET = 1
  IGOLT = 1
  ERCAT = 1

- Read data

  SEGET = 1
  FISET = 1
  EGOLT = 1
  MARET = 1
  CAPET = 1
  IGOLT = 1
  ERCAT = 1

3.2. Formatting

3.2.1. For every test the program performs the following operations :

a) Headers writing
b) Headers verifying
c) Data verifying (all 0)
d) Return to Home
e) Repositioning
f) Headers verifying
g) Data verifying (all 0)
h) Positioning to the next cylinder

3.2.2. The checks made after every transfer operation are the ones seen sub point 3.1.3.

3.2.3. Every track is assumed as being good. If an error occurs while the program is performing one of the transfers seen sub point 3.2.1. the same operation is tried three times. If the error persists an error signal is given. If SWITCH1 is inserted, pressing "START" the program cycles indefinitely on the operation.
Pressing "START" without SWITCH1 inserted, the track is assumed as being faulty.

3.3. Repeated seeks

The program performs the following operations

a) Return to Home
b) Seek to the starting cylinder
c) Seek to the cylinder to be reached
d) If SWITCH2 go to a)

If a check of the reached position is required (blank an column 35 of the parameter card) Return to Home' s and seeks are performed by routines.

3.3.1. Return to Home routines

a) Reset
b) Return to Home
c) Check the conditions CAPE ERCA TESE
In case of error the recycle is made starting from a)
d) Read the Home Address
e) Check the conditions CAPE ERCA
In case of error the recycle is made starting from a)
f) Compare the cylinder read with.
In case of error the recycle is made starting from a)

3.3.2. Seek routine

a) Positioning command
b) Check the conditions CAPE ERCA TESE
In case of error a Return to Home routine is performed followed by a seek routine to reach the starting cylinder; then the recycle is made starting from a).
c) Read the Home Address
d) Check the conditions CAPE ERCA MARE
In case of error a Return to Home routine is performed followed by a seek routine to reach the starting from a).
e) Compare the cylinder read with the teoretical one
In case of error a seek routine is performed to reach the starting cylinder; then the recycle is made starting from a).

3.4. Seek and wait

The following operations are performed

a) Reset
b) Return to Home
c) One cylinder seek forward seek
d) Wait for 3" (in case of G 130 in case of G 120 wait for 5"sec.)
e) If the cylinder reached is less than 202 go to 4.

QUESTA PAGINA E' STATA LASCIATA IN BIANCO PER RAGIONI DI IMPAGINAZIONE.

THIS PAGE IS INTENTIONALLY LEFT BLANK.

Honeywell

Honeywell Information Systems Italia

DIAGNOSTIC PROGRAM - CARD LISTING

4720710Y DSS 157 DISC MONITOR

CONT. SU FO. D01 FO. D00

CARD NUMBER

```
0         1         2         3         4         5         6         7         8
12345678901234567890123456789012345678901234567890123456789012345678901234567890
0001
   000     000 0   000     000    0 00  00 0  00000000     0000 00 0 0 000    0
                     1         1
     22      2       2       2  2 2       2                      2.  2     2
                     3                 3            33 3
                      4                          4      4  4          4 4
                            55            5
  6       6       6     6
                                   7                   7
  88      88      88            8           8           8         8 8    88  8
 9       9       9
0002
   000     000 0   000     000    0 00  00 0  00000000     0000 00 0 0  00    00
                     1         1                                   1
     22      2       2       2  2 2       2                            2
                     3                 3            33 3                        3
  4       4       4     4                          4      4  4          4
                            55            5
  6       6       6     6
                                   7                   7
  8       8       8            8           8           8         8      88  8
 9       9       9                                                   9
12345678901234567890123456789012345678901234567890123456789012345678901234567890
0         1         2         3         4         5         6         7         8
```

COPIE A: TO:

IND. REV.

REV.

SECTION: S.P.S. -

LOC.: PREGNANA (MI)

APPR. AM.

COMPIL. MONDUCCI

EMISS. 9 JUL 71

N.° 4T4720709EA0

Honeywell
Honeywell Information Systems Italia

DIAGNOSTIC PROGRAM - CARD LISTING

4720710Y DSS 157 DISC MONITOR

CONT. SU FO. 202 FO. 001

```
CARD
NUMBER
         0         1         2         3         4         5         6         7         8
         12345678901234567890123456789012345678901234567890123456789012345678901234567890123456789 0
0003     XX      XX      XX              X           X           X           X     X  X
           UUU     UUU U   UUU     UUU    U UU  UU U  UUUUUUUU    UUUU UU U U UUU   U
                                                 0           0
         1       1       1     1
                                 22          2
                               3                 3     3  3           3
                                4           4          44 4
             55      5       5       5  5 5         5                     5
                                 6           6
                                                                     7       7
                                                                        8
         9 9     9 9     9 9                                       9     9
0004     XX      XX      XX              X           X           X           X     X  X
           UUU     UUU U   UUU     UUU    U UU  UU U  UUUUUUUU    UUUU UU U U  UU   UU
                                                 0           0
         1       1       1     1
                                 22          2
           3       3       3     3                 3     3  3
                                4           4          44 4                     4
             55      5       5       5  5 5         5                     5
                                 6           6                     6
                                                                        8
         9       9       9                                         9 9   9
         123456789012345678901234567890123456789012345678901234567890123456789 0
         0         1         2         3         4         5         6         7         8
```

COPIE A:
TO:
IND. REV.

REV.

SECTION: S.P.S. -
LOC.: PREGNANA (MI)

APPR. CM.

COMPIL. MONDUCCI

EMISS. 9 JUL 71

N.° 4T4720709EA0

Honeywell
Honeywell Information Systems Italia

DIAGNOSTIC PROGRAM - CARD LISTING

4720710Y DSS 157 DISC MONITOR

CONT. SU FO. 203 FO. 202

CARD NUMBER

```
0         1         2         3         4         5         6         7         8
123456789 0123456789 0123456789 0123456789 0123456789 0123456789 0123456789 0123456789 0
0005

  0  00   0    00    00    00  0  0    00  0 00  0  0     00 0   00  0 0 00000
    1  1 11  1 11  1  1  1 11     1  1  1    1    1      1  1    1  11  1   1
 2       2    22    2  2 2   2       2    2   2    2 2 2 2 2 2 2 2   2
          3    333    3  3 33    3    3    3    3  3 33      33    3 33
4

                6 66  6 6   6 6   6      6   6 6   6              6      6
 7  7    7  77 77 777    7 7  7    777    77   7    7 777 7     777    7
      8 888    88     8 8  888    8  8  8 88 88  8  8    8 8 88 8    88 888
        9  9       9   99    9 9   9   9 99  9   9   99 9 9  99 9 99 99 9

0006

  0  00  0     0 00    0  0  00 0 00   0 00    00  00  00   0  0   00    0000
    1  1       11  1    1    1    1  1  1        1  1        1  11
 2       2  2 2 2 2   2 2   2 2   2 2   2 2    2    2   2  2 22  2 2   2
            3 3 3 33  3 33    33    3  3 33    33  33   3   3      3
4

                          6 6   6 6   6 6    6   6   6  66      66  6
 7  7    7 7 77   7  7 7   7 7 7 7777    7  7  7          777 7    7 7777
      8 88    8 888    88    8    8 88888  8888 888 8 8  88  88 8 8  8 8
        9999 9 9 9  99 9  9 99 99 9 9 99 9  9  9   99  99  99    9 9   99

123456789 0123456789 0123456789 0123456789 0123456789 0123456789 0123456789 0123456789 0
0         1         2         3         4         5         6         7         8
```

COPIE A:
TO:
IND. REV.
REV.

SECTION: S.P.S. -
LOC.: PREGNANA (MI)

APPR.	COMPIL. MONDUCCI	EMISS. 9 JUL 71	N.° 4T4720709EA0

Honeywell
Honeywell Information Systems Italia

DIAGNOSTIC PROGRAM - CARD LISTING

4720710Y DSS 157 DISC MONITOR

CONT. SU FO: 204 FO. 203

CARD NUMBER

```
0007

 0  00  00  0   00    00    0 0  0  0  00 0   00  0 00  0 00   0 00    000 000
   1  1 1   1   11     1     11 11     1 11  11  1  1  1  1  1  1
 2       2   2 2 22  2 2   2 2       2 2    2  2   22  2 22  2 22    2
          3      33     3         3    3  3   3  3  3     33 3  33    3     3
4

         66       6  6     6 6   6   6 6   6    6  6  6  6  6  6  6
 7  7     7 77   77 77777 7777  77  77777       7   777   777   777 7 777
      8 8 8   8 888  8 8   8  8  88    8  888 888 88 88 8  88 88 88  8 8  8
        9     9 9   99 99 99 99      9999 999 9   99    99    99     9  9 9

0008

 0  00   0 0 00    0 0  00 000 0 0 00    0 0      00   0 0    00  0  0 00 000
   1  1  111 11     11 1 1 1 1 111 11     11  1  1 1 111 11  1 1 11    11
 2       2  2  2  2 2 2         2 2      2 2      2   2     2 2     2
          3   333 3      3  33    3 33     3     333   3     333 33    33
4                                                                          4

         66    6            6   6         6       6   6       6   6   6 6
 7  7   7     77 7 77  77          7    7       7   77      77  7   7
      8   88 888    88   8 888 8 8 888    8   8  88  88 888  88  88  8888
         999 9 9 99  9     99  999 9  9   99   9     99 9 9     9   99 9
```

COPIE A: TO:

IND. REV.

REV.

SECTION: S.P.S. -

LOC.: PREGNANA (MI)

APPR.

COMPIL. MONDUCCI

EMISS. 9 JUL 71

N.° 4T4720709EA0

Honeywell
Honeywell Information Systems Italia

DIAGNOSTIC PROGRAM - CARD LISTING

4720710Y DSS 157 DISC MONITOR

CARD NUMBER

```
0         1         2         3         4         5         6         7         8
123456789 0123456789 0123456789 0123456789 0123456789 0123456789 0123456789 0123456789 0
0009

  0  00       0    0  00 0 0 00  0 0 0  0    0  0   0   0    0 0  0 0       000
    1    1 1      11 1 1  11  1  1  11      11     1   11  1  11 11 1
 2     2 2 2        2 2 2 2       2       2         2    2 2     2
        3   3  3    3 333   3 33  3   3  3    3  3   3  333     3   3
4
                                                                          5
       6 6          6 6 6       6 6       6       6   66  6 6       6
 7  7   77 7 7 7     77 77   7 7   7   7 7 77  7   77  7 7 777   777777  7
      88 8   8    8  888  8     88 88      88   8  88  88     8       8 8
              99  9    9 99   9 99  9   9 999      9   9   9  9        9

0010

  0  00    0 0   00  0 00    00     0  0  0     0     0      0            0 000
    1  1     1   11  1 11  1 11     1  1  1  1  1     1  1  11   1        1
 2       2       2  2 2     2         2                    2 2 2
         33      33  3 33    33  3  3    33  3 33  3  3    3 3   3 3 3 3
4
            66  6 6   6 6   6 6  6     666   66   6     6 66  66 6     6       6
 7  7    7    77  7  77 7  7  7 7  7    7     77 7   7       7    777 777 7 7
      8  88   8  88 88 88  8 88  8  8 88 88    88  8  8  8       88 8 8 8 8
        9 9 9 9  9 9     99    9 9   99  9 99  9 9 9   9   99   9 999999999
```

COPIE A:
TO:
IND. REV.

REV.

SECTION: S.P.S. -
LOC.: PREGNANA (MI)

APPR.

COMPIL. MONDUCCI

EMISS. 9 JUL 71

N.° 4T4720709EA0

Honeywell
Honeywell Information Systems Italia

DIAGNOSTIC PROGRAM - CARD LISTING

4720710Y DSS 157 DISC MONITOR

CONT. SU FO. 206 FO. 205

CARD NUMBER

```
0         1         2         3         4         5         6         7         8
12345678 90123456789 0123456789 0123456789 0123456789 0123456789 0123456789 0123456789 0
0011

  0  00   0 0     0 00      0   0                     0 0 0 0 0 0 00   000
    1  1 11 1 1 1    1  1  11                 1 1 1 1 1 1 1 1 1   11
 2       2  2 2 2 2 2       2 2 2     2 2 2 2 2 2 2 2 2 2 2 2 2 2    2
         3    3 3    3    3 3   3   3         3 3         3 3       3  3  3
4

           6     6      6 66  66   6 6     6 6   6     6 6   6 6 6 6    6 66
 7  7    7  7 777 7 77     7    7 7 777 777777777 7 77777777777 77777 7 7       7
       8  8 8 88888 8 8  8 8      8 88888 8 88888 888 8 888 888 8 8888888
         99999 9 9 9 9 9   99   9 9 9 9 9 9 9 9 9 9 9 9 9 9 9 9           9  9

0012

  0  00  0   0                                 0 0 0 0 0 0 0 0 0 0 0 0 0 0 000
    1  1    11                         1 1 1 1 1                 1 1 1 1 1
 2       2 2 2 2                 2 2 2 2 2 2 2 2
         3   3         3   3 3   3 3   3 3 3 3           3 3 3 3       3 3
4

           6   66    6   6   6 6   6 6   6 6 6       6 6     6 6     6
 7  7    77 7    7 7 7 7 77777 7 7 777 7 7777777 77777 777 777 777 77777 777
       8        8 88888888888888 888 8 888 8 88888888888 8 8 88888888888 8 8    8
         9  99     9 9 9 9 9 9 9 9 9 9 9 9 9 9 9 9 9 9 9 9 9 9 9 9 9 9 9 9 9 9 9 9 9
```

COPIE A:
TO:
IND. REV.

REV.

SECTION: S.P.S. -	APPR.	COMPIL. MONDUCCI	EMISS. 9 JUL 71	N.° 4T4720709EA0
LOC.: PREGNANA (MI)				

Honeywell
Honeywell Information Systems Italia

DIAGNOSTIC PROGRAM - CARD LISTING

4720710Y DSS 157 DISC MONITOR

CONT. SU FO. 207 FO. 206

CARD NUMBER

```
0         1         2         3         4         5         6         7         8
123456789 0123456789 0123456789 0123456789 0123456789 0123456789 0123456789 0123456789 0
0013

  0  00  00 0 0 0   000   0  0     0  0   0 000  0  000   0  0  00  00   0 000
    1  1 11 1 1 1   1 1  11  1     1     11 1 1   1 1 1  11 1   1   1    1
 2       2  2 2   2 2 2            2     2 2   2 2   2 2        2   2     2
         33         333 3 3 33     3  3   3 333  33  33 3 3  3  33  33  333
4

          6     66    666   6    6   66          6 66   6   6      6  6
 7  7   7777 777   7 77    7   77    7     77  77  7 77 7  7  77  777   7 7
       8    888888 888 8  8 8 8888  888   8 888 888 88 8 88 8 8 8 8 888   88
        99 9 9 9  9  99  9    99  9 99  99     99   999 99    99  999 9   9   9
0014

  0  00       0          0  0     0  0  00   0  0  000  00  0  0  0  0 0 0000 0
    1  1      1     1   11 11     1  1   1  11 1 1 1        1  1     111 1   1
 2       2    2        2 2 2                  2   2          2     2 2
         3    33 3   3 3 3  3  3  3     3  3 3 333 33   3  3  3  3  3 3 33
4

            6 6 6        6    6     6   66       6  6   6     6    6    6
 7  7   77   7  7    77  7   77 7  7  77     77  7        7  7     77  7 7
       8 88   8     8 8 8 8 888  8888  8    8 888 888  88   888  888888 8 8
              9  9 99   9    99    99  9   9    99  9   9  99     999
```

0	1	2	3	4	5	6	7	8
123456789	0123456789	0123456789	0123456789	0123456789	0123456789	0123456789	0123456789	0

COPIE A: TO:

IND. REV.

REV.

SECTION: S.P.S. -

LOC.: PREGNANA (MI)

APPR.

COMPIL. MONDUCCI

EMISS. 9 JUL 71

N.° 4T4720709EA0

Honeywell
Honeywell Information Systems Italia

DIAGNOSTIC PROGRAM - CARD LISTING

4720710Y DSS 157 DISC MONITOR

CONT. SU FO. 208 FO. 207

CARD NUMBER

```
0015

  0  00     0     00        0  00    0     0 00   0   0  00  00  00  000
    1  1 1      1  1     1  1    1    1    11 1           1   1   1   1  11
 2       2          22       2                2           2   2   2
         3   3    3  33 3   3 33  33    3  3   3 33  33  33  33  33  33
4

            666 66    6 6 6    6        6    66     6 6 6 6    6   6
 7  7    77  77  7  7 7  7    7   7        7  7  7 7   7     77 77  777  7
       8 88   8  88 8 8     8 888 888    888  88 8 8   8  88 888 8 8 888 88
         9      9  9  9 99      9 9     99   9           999 99  999   9

0016

  0  00  00   0  00     0     0 00    0  00  00  00  00  00    00    0  00
    1  1      1 11    1    11 11       1   1   1  1 1  1    11    1    1
 2       2   2   2    2      2         2   2   2  2          2    2     2
         33   3  33     3  3   3 33    3   3  33   3  33  33   33   33
4

         6     6 6    6     6        6    6     6   6    6    6   6
 7  7    7   77  77     7  7777  77 777 7  7   7  77  77    7    7  7 7 7
       8 8 8 888 8 8    8888 8 8 888 88 8888 8 888888888 8   88   88  8 8 8
            99  99 9     99 9 9    99     9   9  9 9 9          9  9
```

0	1	2	3	4	5	6	7	8
123456789	0123456789	0123456789	0123456789	0123456789	0123456789	0123456789	0123456789	0

COPIE A:
TO:
IND. REV.
REV.

SECTION: S.P.S. -
LOC.: PREGNANA (MI)

APPR.
COMPIL. MONDUCCI
EMISS. 9 JUL 71
N.° 4T4720709EA0

Honeywell
Honeywell Information Systems Italia

DIAGNOSTIC PROGRAM - CARD LISTING

4720710Y DSS 157 DISC MONITOR


```
CARD
NUMBER
         0         1         2         3         4         5         6         7         8
         123456789 0123456789 0123456789 0123456789 0123456789 0123456789 0123456789 0123456789 0
0017
   0  00  00   0  0  0 00     0 00  00  00  00   0        0        0     00
     1  1 11  11  1  1 111   11 1   1   1  1 11   1  11    11  11    1  1
  2       22   2      2      2     2   2  2 2          2      2 2
          33 3 3  3  3 33     3 33  33  33 333  3       33       33      3
4
          666       6 66       66  66   6              6 6   6   6 6   6
 7  7    7 7 7        777       7   7   7       7       77       7
       8 8 8 88   8    8 8 8    88  88  88   8  888 8 88  8 8 8 88  888 8 8
          99  9    9     9    9                     9  9  99    9    9
0018
   0  00    0  0           0 0   000000000  0  00     0  0     0 0      000
     1  1  11 11 1111111111 1 1111        11 11 11 1  11  11 1  11 1      1  1
  2      2 2 2 22222222222 2 2222        22 22      2 2        2
          3 3    33333333333  333          3 3333    3  33    3 3      3
4                                                                        4
          6     6       666  666       66 66666   6      6
 7  7    7      7    7777     77    7777  777 77 7     7 7      77 7 7
       8 888    8  88  88  88 888  88 88  88    88 8 88  888 8 88  88 8 8 8
          9 9     9 9 9 9 999   9 9 9 9 9 9  9    9    9    9    9  9 9 9
```

COPIE A:
TO:
IND. REV.

REV.

SECTION: S.P.S. -
LOC.: PREGNANA (MI)

APPR.

COMPIL. MONDUCCI

EMISS. 9 JUL 71

N.° 4T4720709EA0

Honeywell
Honeywell Information Systems Italia

DIAGNOSTIC PROGRAM - CARD LISTING

4720710Y DSS 157 DISC MONITOR

CARD NUMBER

```
0         1         2         3         4         5         6         7         8
123456789 0123456789 0123456789 0123456789 0123456789 0123456789 0123456789 0123456789 0
0019
  0  00     0 00  0 0 00  0 00  00  0 0 0 0 0 00000000000        000000000 00
    1  1 1  1 1   111  1  1 1   11  1 111 111 1          11111111          1  1
 2       2  2 2   2 2     2 2 2 2     2 2   2            22222222          2
         3  3 33  3 3 33  3 333 33  3 3 3 3 3  3      333    3   333333333
4
                                                                            5
         6  6              6   6  6 6   6    6666666   6 666 66     66666
 7  7   7     7  7       7          7        7  7777   77   7 7 7777   77
      8 88    88 88  88  8  88  8    8   88  888  88  8  8 88888  88  88
         99  9   9 99     9     9 9    9   9    9 9 9 9 9  999999 9 9 9 9
0020
  0  00  0    0  0 0 00  00  0 0   0 0  0  0 00     0 0   0                00
    1  1  1111   111 1   11  1 11  111  1  1 1    1  111  11  11       11   1
 2       22222   2 2     22  2 2     2     2 2   2 2 2 2   2          2
         3 3  3  3 3 33  33  3 3 3   3  3    33  3     3   3  3       33
4
         6 6  6     66   6  6            6 66  6   6                      6
 7  7   7777  7       7  7    7  7       7 77  7   7
      8 8   8 8  8   88  8    88  8  8  8 88  88       8    8      8 8
         9 99 9    9     9  9 99  9   9       9   9   9     9   99
```

COPIE A: TO:

IND. REV.

REV.

SECTION: S.P.S. -
LOC.: PREGNANA (MI)

APPR.

COMPIL. MONDUCCI

EMISS. 9 JUL 71

N.° 4T4720709EA0

Honeywell
Honeywell Information Systems Italia

DIAGNOSTIC PROGRAM - CARD LISTING

4720710Y DSS 157 DISC MONITOR

CONT. SU FO. 211 FO. 210

```
CARD
NUMBER   0         1         2         3         4         5         6         7         8
         123456789 0123456789 0123456789 0123456789 0123456789 0123456789 0123456789 0123456789 0
0021
                                                                                                
                                                                                                
          0  00  0     0 0.       0 0 0 0                                                  00
            1    11                 1                                                        1
        2        22
                3 3                   3    3
    4
                                                                                                
                6 6       6 6       6   6
     7  7     777        77 7 7        7  7                                                    7
              8 8 8      8  8 8 8      8    8
              9999  99    99 9 9        9
0022
                                                                                                
          0  00        0 0   0    00    0 0  0     0     0   0      0  0      0  00
            1  1      11 1   1  1 11    111 11  1  1     1    11     11  1  1  11    1
        2             2         2   2 2 2             2  2     2     2     2 2
                3 3 3 3 3   3    33  3 3 3  3     3    333 3 33  3   3 33  3 3 3
    4
                                                                                                
              666666     66  66 6  66 6  6   6      666 6666  66    66  6666
     7  7     7       7  7   7 7   7 7   7            7  7 77  7        7 7
              8      8  8 8 8  8 88    88   8     8    8    8      8   8     8       8
                9   99   9 9 9     9    9   9                9  99    9    9    9
         123456789 0123456789 0123456789 0123456789 0123456789 0123456789 0123456789 0123456789 0
```

COPIE A: TO:

IND. REV.

REV.

0	1	2	4	6	8
		MONDUCCI	9 JUL 71	4147207 09EA0	

SECTION: S.P.S. -	APPR.	COMPIL.	EMISS.	N.°
LOC.: PREGNANA (MI)				

Honeywell
Honeywell Information Systems Italia

DIAGNOSTIC PROGRAM - CARD LISTING

4720710Y DSS 157 DISC MONITOR

CONT. SU FO. 212 FO. 211

CARD NUMBER

```
0023

  0  00     0    00     0   00     0         0  0  0     0  0  0  0      00
    1  1 1 11    11     1  1 11     1  1      1    1    11  1    1    11  1
 2                22   2   2 2   2  2   2        2 2   2 2      2 2
         3  3    333  33  3 33  3  33  3   3    333    3 33  3 33   3
4

        66    66 66 666   6  6  66  6 6 6      6666   6   6  6666 6  66
 7  7    7     7 77  77   7 7 77  7 7 777 7     77 7  7      77 7
      8  88 8 88 88 88 88  8 888 8  8    8 8 8  8 888  8  8 8  8 88   88
         9 9       9 9 9    9 9      99 9  9   9     9   9   9    99   9

0024

  0  00  00  0  0  0   0 0   0  0  00  0  0    0  0  0    0  0  0  00 0
    1  1  1  1    1    11  11    1   1  1  1  1  1  1    1    1  1
 2      2    2 2 2    2   2    2 2 2  2   2  2 2   2 2    2   2 2  2
       33 33   333    3 3 3 33  333 33  33  3 33   33  3 33  3 33   3
4

        66 6   6666 6  66  6   6   6  66  66  666  6 66  6 66  6 66  6 66
 7  7    7      77 7                 77  7    7    7   77   77    77
      8  8 8 8  8 888  8   8   8 8  88 88   8    8 88  8 88  8 88  8  8 8
         9   9  9 9   9   9    99 9   9 99  9 9 9 9 99  9 999 9 9   9
```

COPIE A: TO:

IND. REV.

REV.

SECTION: S.P.S. -

LOC.: PREGNANA (MI)

APPR.

COMPIL. MONDUCCI

EMISS. 9 JUL 71

N.° 4T4720709EA0

Honeywell
Honeywell Information Systems Italia

DIAGNOSTIC PROGRAM - CARD LISTING

4720710Y DSS 157 DISC MONITOR

CONT. SU FO. 213 FO. 212

CARD NUMBER

```
0025

  0  00  00    0 0  0  0  0      0  0     0      0  0     0      0  0     000
    1  1 111   111  1  1  1     11  1     1     11  1     1    111  1     1   1
 2       2       2     2 2       2       2 2   2 2       2    2 2     2 2   2
          3      3 33  3 333     3 33    333     3 33  3 333    3 33    33
4

       6     66  6   6 66    66  6   6 66 6  6   6   6 66 6  6   6   6 66
 7  7                  77 7          77 7          77          77
     8   8   8   8 8  8 888  8   8 8  8 888  8   8 8  8 888  8   8 8  8 88
              9    9   9 9  999    99  9    999    99  9 9  9 9    99  9

0026

  0  00         0  0     0    0 0  0     0    0  0   0  0   0     0     00
    1  1  1   111  1     1     11  1  1  11    1  1 1  11 1 1  1      1  1
 2       2    2 2     2 2    2 2       2 2       2   2       22    2  2 2  22
             3 3 33  3 333   3 3 33    3 3    3  33  3 3 333 33    33  3
4

       6    66  6   6 66    66  6   6 66    6   6  666  6   666   6  666
 7  7         7        77 7   7       77         7 7    7  7 7   777 7
     8        8   8 8  8 888  8   8 8  8       8 8      88  88  88        8
        99    9 9    99  9 9  999    99  99     9 9 99  9 9           9  99
```

COPIE A: TO:

IND. REV.

REV.

SECTION: S.P.S. -
LOC.: PREGNANA (MI)

APPR.

COMPIL. MONDUCCI

EMISS. 9 JUL 71

N.° 4T4720709EA0

Honeywell
Honeywell Information Systems Italia

DIAGNOSTIC PROGRAM - CARD LISTING

4720710Y DSS 157 DISC MONITOR

CONT. SU FO. 214 FO. 213

CARD NUMBER

```
     0         1         2         3         4         5         6         7        8
1234567890123456789012345678901234567890123456789012345678901234567890123456789 0

0027
   0  00    00      0 0 0 0 000  0    0 00      0 00  0 00  0  0    0 0  0  00
     1  1 1   1  1   11 111 1 1 1 1  11  1  1  11 11  1 11     1    111  1
  2       2 2   2 2 2 2   2 2 2 2   2 2  2    2 2       2     2       2       2
            333 3   3 3   3  33 33  3 3  33 3 3 3  3  3 33  3 333   3 3 33     3
4
         6 6   66  6   66  66  6   66  666 666   66  66 6  6666    6   6   6
 7  7       7777    7       7      7     7   77         7    77     7
       8  8 8 8 88  88   8  88   8  8   88     8   8    88    88   8   8 8
         9   99  9   9   9 9   99    9 9   99  9    99    99  9    999    99

0028
   0  00  00   0    0 0  0  0  0      0  0  0   0 00   0    0 0 0  00    0   00
     1  1     1    111  1     1     11  1  1  11 1        1  111  11    1
  2       22 2     2 2     2 2       2       2 2   2 2   2     2   2    2  2  2
             33    3 3 33  3 33    3 3 33    3 3 33  33  33  3 3  33    33 3
4                                                                              4
         6 666 6  6   6   6666 6  6   6   6666  6   6  666  66     6    6 66
 7  7       77 7   7        77 7  7         77   7  77  7          7    7 7
       8  8  888  8   8 8    888   8  8 8       888  88   8  88   88    8
         99  9 9  999    99  9 9     9   99  99 9    9    9 9 9    9    9

1234567890123456789012345678901234567890123456789012345678901234567890123456789 0
     0         1         2         3         4         5         6         7        8
```

COPIE A: TO: | IND. REV. | REV.

SECTION: S.P.S. -
LOC.: PREGNANA (MI)

APPR. | COMPIL. MONDUCCI | EMISS. 9 JUL 71 | N.° 4T4720709EA0

Honeywell
Honeywell Information Systems Italia

DIAGNOSTIC PROGRAM - CARD LISTING

4720710Y DSS 157 DISC MONITOR

CONT. SU FO. 215 FO. 214

```
CARD
NUMBER      0         1         2         3         4         5         6         7         8
            123456789 0123456789 0123456789 0123456789 0123456789 0123456789 0123456789 0123456789 0
0029
          0  00  0     0 0 00    0 00     0     0      0 0 0  0    00      0   0  000
            1  1 1  1  111   1  11 11     1    11     11  11  1    11     11  11
         2       2 2     2     2  22  2 2          2 2   2    2 2     2 2   2  2  2
                  3 3 3 3 333 3   33  3 33     3    3 3  3  3    33  3 3 3   3
       4                                                                                5
                 6 6   6   6   66  666 666   6 6 6   66  66      6  6  6666
       7  7     777         7 7    77 7 77   77     7              7   77
            8     8  88      88   8  8 88 8   8        88   8 88 88 88 8    8   8
                 9  9 9 9 9 9   9 9 9     9   9     99 9 9  9     9   99   9   9
0030
          0  00     0  0    0000 0      0 000  00 0 0 000    000 00 000    0000 000
            1  1  11 111 1111    1 111111 1   11  1 1 1   11111   1  1   1111    1
         2       2  2   2    2222 2     2 222  22 2 2 222     222 22 222    2222 2  2
                 33 333 333333  33333333 3   333 333 3   333333 33  33 3333333  33
       4
                 6   66  6          6              6  6     6     66      6              6
       7  7     7     7    7 77     77  7777 77   7 777    777  77  7  7  7 77
            8 8     8  8   88  8 8    8  8     8 8  8     8    8  888     88  8
                 99 9999999 9 9  99999  99 9  9  99999 9 9  9   999 999 9 9 9 9  99
            123456789 0123456789 0123456789 0123456789 0123456789 0123456789 0123456789 0123456789 0
            0         1         2         3         4         5         6         7         8
```

COPIE A: TO:

IND. REV.

REV.

SECTION: S.P.S. -
LOC.: PREGNANA (MI)

APPR.

COMPIL. MONDUCCI

EMISS. 9 JUL 71

N.° 4T4720709EA0

Honeywell
Honeywell Information Systems Italia

DIAGNOSTIC PROGRAM - CARD LISTING

4720710Y DSS 157 DISC MONITOR

CARD NUMBER

```
0031

   0  00      0  0    0  00 0 0 0      000 00000  0     0      0000 0 00    0 00000
     1  1 1111 11 111 11  1 1 1 11111    1      11 1111 11111     1 1  111 1
  2        2   2  2    2  22 2 2 2      222 22222  2     2      2222 2 22    2 222  2
            333333 333 333 333 3 33333  333     33 3333 3333333  333 333333
4

          6 6     6 6      6         6  6    6     6  6 6 6         66
 7  7      7     7      77 77   7 77 7 777  77       7  7   7  7 77     77 77 777    7
       8 88 8 8    8  88     8            88 88 88     8   8      88  8          8
            99  9999       999 99 9  9 999   9 99 999 999 9 9 9  999  9     9

0032

   0  00  0     0000 0 0 00 0 0 0  00 0 000 00    0 000     00000 0 0  0 0  0  00
     1  1  1111     1 1 1  1 1 1 11  1 1    1  111 1    1111      1 1 11 1 11 11
  2        2    2222 2 2 22 2 2 2  22 2 222 22    2 222     22222 2 2  2 2  2     2
            3333  3 333 3  3 3 33333 333   3 3333 3   3333    3 333 33 33  333
4

          6      6  6  6  6 6          6   6   6           6  6  6  6 6  6 6
 7  7      7 77  777  77 77 7 7   777   77777 7    7777 77  777   7 77 7  7
       8 88    88   8 8  8 8 8 8 8  88 8   88   8  8     888   8 8  8 8  8      8
            9  9 99 99999 9999 99    9999 9999 9 99 9  9  9999 99999 99      9
```

0	1	2	3	4	5	6	7	8
123456789	0123456789	0123456789	0123456789	0123456789	0123456789	0123456789	0123456789	0

COPIE A:
TO:
IND. REV.
REV.

SECTION: S.P.S. -
LOC.: PREGNANA (MI)

APPR.
COMPIL. MONDUCCI
EMISS. 9 JUL 71
N.° 4T4720709EA0

Honeywell
Honeywell Information Systems Italia

DIAGNOSTIC PROGRAM - CARD LISTING

4720710Y DSS 157 DISC MONITOR

CARD NUMBER

```
0033

  0  00  000 0 0  00 0       00 0 0  00 000 000 0 00  00 0 0  00 00   0   000
    1  1 1  1 1 11  1 1111111  1 1 11  1   1  1 1  11  1 1 11  1  111 111
 2        222 2 2  22 2       22 2 2  22 222 222 2 22  22 2 2  22 22   2   2  2
            33 3 333333333 333  3 3 33333 333 3 3 3 333  3 3 33333 333333333
4

        66   666    6  6      6   6     6 6   66    6  6   6     6 6   6
 7  7      7 7   7  7       7 7 777 7           777   7 777 7       7   7 7
      8 8  8      88 88      8       88  88 88     8  8       88  8 8 8
         9 99999   999  9 9 999 999  9999999999 9999 999 999  99999  9 9     9

0034

  0  00   0 0 0 0   0 0  0  00 00 00 0      0  000  00 00  000000 00  00 0 00 0
    1  1   1 1 1 111 1 11 11  1  1  1 111111 11   11  1  11      1  11  1 1
 2        22 2 2 2   2 2  2  22 22 22 2      2  222  22 22  222222 22  22 2
            333 3 333333  333 33 333333333 33 33 3333333 333333  33 333 3333  3
4

        66 6       6  6  6 6   6    6  6         6    6        6   6 6 6
 7  7      7   7 77    7  7  7 7    7        77 77          7  77  7  7 7  7
      8 8   8       8 8  8   8  8 88 88        8 8  88  8 8 888 8 88   8 8
        99999 99 9 9       99 999   999  9 99  9     9999   99 99  9 99 9 9
```

COPIE A:
TO:

IND. REV.

REV.

SECTION: S.P.S. -	APPR.	COMPIL. MONDUCCI	EMISS. 9 JUL 71	N.° 4T4720709EA0
LOC.: PREGNANA (MI)				

CARD NUMBER

```
0         1         2         3         4         5         6         7         8
123456789 0123456789 0123456789 0123456789 0123456789 0123456789 0123456789 0123456789 0

0035

  0  00    000  00 00  000000  0  000    0000 0 0  00 0  0  00 0 0 00 0    00
    1  1 11   11  1  11      11 11   1111    1 1 11  1 11 11  1 1 1  1 1111   1
 2       2 222  22 22  222222  2  222    2222 2 2  22 2  2  22 2 2 22 2
          3 3333333 333333  333 33   3333  3 333 333333  333 33 3 33333333   3
4

        66    6   6        6            6  6  6     6  6 6   6 6   6  6
 7  7      77          7  77    7 777 77  777  77 7   7  7  7 7 7   7
      8 88 8 8  88  8 8 888 8  8   8     88   8 8  88 8  8   8     88 88
        9  9     9999   99 9 9 99 9    9 99 99999 9 9      99 9999   999  9

0036

  0  00  0  0 00 00 0 00 000  000 0 00 00 00 0 00 0000 0  0  00 0      00 000
    1  1  11 1  1  1 1  1   11   1 1  1  1  1 1  1    1 11 11  1 111111  1
 2       2  2 22 22 2 22 222  222 2 22 22 22 2 22 2222 2  2  22 2      22 2   2
          3333  3333 3333 333333 3 3 33  3333 3333 33 3 33 333333333 33  3   3
4

        66     6    6    6 6    6      6    6    6     6 6    6  6  6  6
 7  7      7  7 7  7          7  7777  7 7  7        77  7 7  7        7 77
      8 88  8 8  88   88  88   8     8 8  88   88  88888     88 88   8 8
        99 99 999  99  99999 9 999 999 999  99  99999 999999   999  99 999

123456789 0123456789 0123456789 0123456789 0123456789 0123456789 0123456789 0123456789 0
0         1         2         3         4         5         6         7         8
```

COPIE A: TO:

IND. REV.

REV.

```
CARD NUMBER   0         1         2         3         4         5         6         7         8
              12345678901234567890123456789012345678901234567890123456789012345678901234567890123456789 0

0037
                0  00   0 0   00 000 0   0   00 0       00 00 00 000 0 0 0 00 0       00 00 0 000
                  1   1 11 11   1    1 11 11   1 111111  1   1   1    1 1 1 1   1 111111  1   1 1
              2         2 2   22 222 2   2   22 2       22 22 22 222 2 2 2 22 2       22 22 2 2
                         3 33333 3 3 333333333333 33   3333333 3 333 3 33333333 33   3333 33   33
              4

                     66 6      6 6          6   6   6   6        6 6   66 6    6   6   6   6     6
              7   7     77 7        7 7   7   7         7 7          7    7    7         7 7   7
                   8 8      88   8   8   8   88 88    8 8   88 88   8   8      88 88    8 8   88    8
                     9 999   999999999 9    999   99 999     99999999999    999   99 999   99

0038
                0  00    0 00                                                                  00
                  1       1          1
              2         22 22 2
                         33 3 3                                                                  3
              4                                                                                    4

                    666   6 666
              7   7    77     7    77
                   88   8   8      8
                     99999 9 9999
```

Honeywell

Honeywell Information Systems Italia

DIAGNOSTIC PROGRAM - CARD LISTING

4720710Y DSS 157 DISC MONITOR


```
CARD
NUMBER   0         1         2         3         4         5         6         7         8
         123456789 0123456789 0123456789 0123456789 0123456789 0123456789 0123456789 0123456789 0
0039
                                                                                                 00
           0  00   00  0 0   0 0     0   0 0
              1     1    11  1     111  11
         2        2   2 2          2  22
                3  3  3 3   3       3   3                                                      3
        4
                                                                                                5
                          6     6        6
         7  7   7 7   7 7   7          77
                888 8 88 88  88 8 8 8    8
                9   9    9 9      9     9
0040
           0  00        00         0   000 000   0  0 0  0  000      00  0     0000  000
              1  1 1 111  11111111 111   1   111 11 1 11 11   111111  11 11111    11
         2             22        2   222 222   2  2 2  2  222      22  2     2222  2
                      3333   33333333   33  333333 3 33 3333 333  33333333       333  3
        4
                66             6     6  6     6  6   6   6                   66       6
         7  7   7    7    77  7     777  7     7    7 7             7 777  7 77  7
              8      88   8    88   8  88    88 8    8  88    8  8  8      88    8
                 9      999   9 9    999 9     99999 999 999 9      9      9 999 9
```

```
         123456789 0123456789 0123456789 0123456789 0123456789 0123456789 0123456789 0123456789 0
         0         1         2         3         4         5         6         7         8
```

REV.

COPIE A: TO:

IND. REV.

SECTION: S.P.S. -

LOC.: PREGNANA (MI)

APPR.

COMPIL. MONDUCCI

EMISS. 9 JUL 71

N.° 4T4720709EA0

Honeywell
Honeywell Information Systems Italia

DIAGNOSTIC PROGRAM - CARD LISTING

4720710Y DSS 157 DISC MONITOR

CONT. SU FO. 221 FO. 220

```
CARD NUMBER   0         1         2         3         4         5         6         7         8
              123456789 0123456789 0123456789 0123456789 0123456789 0123456789 0123456789 0123456789 0

0041

   0  00  0000  0  00 0 0   0 0  0  000  0 00 0 00000 0  00   0 0 0000000 0 00
     1  1     11 11  1 1 111 1 11 11   11 1  1 1     1 11  111 1 1       1 1
  2        222  2  22 2 2   2 2  2  222  2 22 2 22222 2  22   2 2 2222222 2
           33333 333 333 33333 33 333  3333 3333    33 333 33333 333   3 333  3
4

          66          6  6  6    6     66   6 666      6      6        6  6
 7  7    7 7  7  7 77   7 7   7  7 777    7 7   7777   7 77 7   7  7  777      7
       8    88  8     8 8   888    8 8   8      8 8 8         888 8 888   8
          9 999 99  99999  9 9  99    99  999999   99999  9  9 9    999 9999

0042

   0  00  00 00 0  00 00 0 0  0000 00000 0  0    0 0      00  0     0 0 0   00
     1  1 1 1  1 11  1  1 1 11    1     1 11 1111 1 111111  11 11111 1 1 111
  2        2 22 2  22 22 2 2  2222 22222 2  2    2 2      22  2     2 2 2
           3  3333 33  3 3 33  333 3  33 33 3333 3 333  3  33333   3333 333  3
4

          666  6        6   6  66   6 66          6
 7  7    7 7 7 7  7   7 777 7 77     77   7 777  7  7     77 777  7  7  777
       8  88 8  88 88 8       8888  8888 8  888 88     8  8  8      8 8 888    8
          9 999 99999999 999 99 99999999 9       99  9    9 9       99

123456789 0123456789 0123456789 0123456789 0123456789 0123456789 0123456789 0123456789 0
0         1         2         3         4         5         6         7         8
```

COPIE A:
TO:
IND. REV.
REV.

SECTION: S.P.S. -
LOC.: PREGNANA (MI)

APPR.
COMPIL. MONDUCCI
EMISS. 9 JUL 71
N.° 4T4720709EA0

Honeywell
Honeywell Information Systems Italia

DIAGNOSTIC PROGRAM - CARD LISTING

4720710Y	DSS 157 DISC MONITOR	CONT. SU FO. 222 FO. 221

```
CARD      0         1         2         3         4         5         6         7        8
NUMBER   1234567890123456789012345678901234567890123456789012345678901234567890123456789 0

0043
          0  00     00 0     00 00 0000       0  00 0      00 0 00 000 00 0000 0000   00
           1  1  1  1 11111  1  1    1111111 11  1 11111  1 1  1   1  1    1    11
         2         22 2     22 22 2222        2  22 2      22 2 22 222 22 2222 2222
                   3  33333333 33 333   3333333333  3333333 33 33 33  3333   333 3  33   3
        4

                66     6   6     6          6      6   6       6  6    66   6 66
        7  7    7       7 7     77    7 7    7    77    7   7 77 77  7 7   77    7777
              8   8 88 8     88     8888         88 8  8   8 88       88  88 8888  888
                99999 9 9  9     999 9 9  9  9 9  9 9 9 9   99   999999   99 999999 9   9

0044
          0  00      0 0 0  00 00       000 0     00   0  000 0 00   0000 0 0 0 00 00 0
           1  1 111 1 1 11  1  111111    11 11111  111 11   1 1  1111    1 1 1 1  1
         2          2 2 2  22 22        222 2     22   2  222 2 22   2222 2 2 2 22
                   33 3 3 33  3 3333   333 33333     333 33 3333 333333 33333 3333 3
        4                                                                                4

                66 6  6       6        6             6 6 6    6 6                   6
        7  7    777  7     7   77      7  777  7 7   7   7   7 7  7  77 7   7  77
              8    8 8   8  88      8  8   8      88 8     8 8 8   8  88 8 8 8 8
                9   9999 99 999  9 9      9 9     999999   9   999999 9  99  99   99

         1234567890123456789012345678901234567890123456789012345678901234567890123456789 0
          0         1         2         3         4         5         6         7        8
```

COPIE A: TO: | IND. REV. | REV.

SECTION: S.P.S. - LOC.: PREGNANA (MI)	APPR.	COMPIL. MONDUCCI	EMISS. 9 JUL 71	N.° 4T47207Π9EAΠ

```
CARD
NUMBER
         0         1         2         3         4         5         6         7         8
         123456789 0123456789 0123456789 0123456789 0123456789 0123456789 0123456789 0123456789 0
0045
   0  00  00  0   000 00   0 00   000  000 0000 0 0   0 0  00 00 0 0000 000000
     1  1   11 111   1  111 1  111   11   1    1 1 111 1 11  1  1 1    1        1
  2         2  2   222 22   2 22   222  222 2222 2 2   2 2  22 22 2 2222 2222
            33333333 33  333 33 3333 33333 3  3 333 333 3333  3333 3  333 3
4                                                                                    4
        66      6 6       6     6 6     6  6  6  6  6 6 6  6    6 66   6 66
 7  7   77 77  7   777   7  77 7   77  7   777  77   7   77 7  7  77     77
      8   8  8   8   88 8        8    8   88   8 8 8 8 8  8  88   8888  888
        99999   9   9999999  9  9   9   9 99 99999 9  9 99999  99 99 999999
0046
   0  00  0 0  0  0  0 0000   0  0000 0  0 0000 0 0   0 0 00 0  00 0 0  0  000
     1  1 11 11 11 11 1    111 11    1 11 1    1 1 111 1 1  1 11  1 1 11 11
  2         2  2  2  2 2222   2  2222 2  2 2222 2 2   2 2 22 2  22 2 2  2  2   2
             3  3  3  3    333 3333  3333 3  3 333 33333 3  3333 3333333 333
4                                                                                    4
        66 6  6  6  6   66  6         6    6  6  6  6    6          6
 7  7   77 7  7  7 77 77  7  7  7 77   7  777   7 7   7 7 7  7    7   7  7
      8  8   8  8    88        88  8 88 88   8 8   888 8  88 88 8 8
        9 99  9 99  9 9 999 99 9 9  9999  99 99999  9 9  999 99999 99 99 9
```

COPIE A: TO:

IND. REV.

REV.

SECTION: S.P.S. -

LOC.: PREGNANA (MI)

APPR.

COMPIL. MONDUCCI

EMISS. 9 JUL 71

N.° 4T4720709EA0

CARD NUMBER

```
0                1                2                3                4                5                6                7               8
123456789012345678901234567890123456789012345678901234567890123456789012345678901234567890123456789012345678901234567890
0047

  0  00   000 0   0     00 0   0  00 000   0  0 0 00    0000 0 0     000   00
    1  1     1 111 11111  1 111 11  1   111 11 1 1  1111    1 1 11111   111
 2         222 2   2     22 2   2  22 222   2  2 2 22    2222 2 2     222
          3  33333333333 33 3333333 33  333 33 333 33333  3 333 333333 3333   3
4                                                                                4

        66     6   6   6     6     6     6     6 6   6  6  6    6 6
 7  7   77 77       7   7 77 7    77  7   7  77  7 7  7  777  77   7   77
      8 8888  8 8 8   8 88     88    888 8      8    8  88   8 8    8    8
        99  9999 9 9 9   99  9 9  999999999 99  999999 99 99999 9  9   9 9

0048

  0  00    0 0  0  0 000    00000 0 0   0 0   0 0   0 0  0  0     0  00 0  00
    1  1 11 1 111 1 1   1111     1 1 111 1 111 1 111 1 11 11 11111 11  1 11
 2         2 2   2 2 222    22222 2 2   2 2   2 2   2 2  2  2    2  22 2
        33 3333  3 3   3333   3 333 33333 333 33333 3 33 333333333333 3333
4                                                                                44

        6 6 6 6  66          6  6  6  6     6  6          6   6     6  6
 7  7   7  7   7 7   7777 77  777   7 7   7  77   7 7 77 77   7 7    77
      8 8  8 8   8 8  8     888   8 8   888   8 8       88 8     88    8
          9 99  99 9 9  9999 99999  9 9   99 9 9 99 9    9 9  9 9  999 9
```

COPIE A: TO:

IND. REV.

REV.

SECTION: S.P.S. -	APPR.	COMPIL. MONDUCCI	EMISS. 9 JUL 71	N.° 4T4720709EA0
LOC.: PREGNANA (MI)				

```
CARD NUMBER   0         1         2         3         4         5         6         7         8
              12345678901234567890123456789012345678901234567890123456789012345678901234567890
0049

                0  00  00 0  000    0000 0 0   000   00          0000000 0  0  00 00   0 00
                  1  1   1 11   1111    1 1 111   111  1        11        1 11 11  1  111 1
              2         2 2  222    2222 2 2   222   22          2222222 2  2  22 22   2
                        333 33   3333  3 333 3333 3333333        33  3    3 33 33333  33333
4                                                                                            4
                                                                                             5
                      6          6  6  6  6 6                     6    6          6
              7  7    7    7 777 77  777  77 7   77 7              77  7    7  7    777   7
                   8 8 8 8   8     88   8 8   8     88            88 8 888    8  88  8 8 8
                      9  99 9    9 99 99999  9   9 9 9            9 999 99999 99  99 999  9

0050

                0  00  0  000 00   00 0 0 0000 0000  0 0 0    0 0  00 0 0  0000  00   00000
                  1  1 111   1  111  1 1 1    1    11 1 1 1111 1 11  1 1 11    11  111
              2          222 22   22 2 2 2222 2222  2 2 2    2 2  22 2 2  2222  22   222
                        333   333333  3 3 3  333 3  33 3 3 3333 3 33  3 3 33  333   333  3
4                                                                                            4

                      6    66       6   6 66   6 666   6 66 6   6   6   6  66  6 66   66    6
              7  7    7   7  7  7  7 777 777     77  77          7 7 777 7 77 7  77 7 77
                   8 88 88   88   8      8888  8888 8     8 88    8       88888888   888
                        9 999999  999 99999 9999999 999 999999999 999 999 99  9 99 9 99
```

0	1	2	3	4	5	6	7	8

COPIE A:
TO:
IND. REV.
REV.

Honeywell
Honeywell Information Systems Italia

DIAGNOSTIC PROGRAM - CARD LISTING

4720710Y DSS 157 DISC MONITOR

CARD NUMBER

```
0         1         2         3         4         5         6         7         8
123456789 0123456789 0123456789 0123456789 0123456789 0123456789 0123456789 0123456789 0
0051

  0  00   0 0000    0 0   00 00 0 0      000  0 00 00 0000 0000  00 0  0 0 00
    1  1   1    1111 1 111  1  1 1 111111   11 1  1  1    1    11  1 11 1 1
 2        2 2222    2 2   22 22 2 2      222  2 22 22 2222 2222  22 2  2 2
         333 3  3333 33333  3 33 33333333   3333  3333  333 3  333 3 3333 3
4                                                                          4

        6   6 66 6     6   66  6   6 6    66     6    66   6 666    6  6
 7  7    7     77  7     7 7  7  77    7  7  7   7 7   77     77   7  7    7   7
      8 888  8888  88 8   8   8  888  8 88   88 8  88 8888  8888 88   8 88
        999999999 99  9 9 99999999 9 9  9 99999 999   99 9999999 9  999 999

0052

  0  00    00 00 0000  00  0  0000 0000 000000 0 0 0  000 0 0  0  0   0 00000
    1  1 11  1  1    11  11 11    1    1      1 1 1 11   1 1 11 11 111 1
 2        22 22 2222  22  2  2222 2222 222222 2 2 2  222 2 2  2  2   2 222
         33  3333  333   33 33  333 3  3  3   3 3 3333   3 3 333333333 33
4                                                                          4

        6   6    66  6 66    66   6 66   6   6    6  66  66  6  6 6
 7  7   77 7 7   77 7  77  77 77    77 77  7 7   7   77  77  7         77
      8 8  8  88 88888888    8888  88888 8 88   8 8   8       88 8   8 88    8
        9  999   99  9 99 99  99 9999999 999 999 99  9 999 9999 9  9 99   9

123456789 0123456789 0123456789 0123456789 0123456789 0123456789 0123456789 0123456789 0
0         1         2         3         4         5         6         7         8
```

REV.

APPR.	COMPIL. MONDUCCI	EMISS. 9 JUL 71	N.° 4T4720709EA0

SEZIONE S.P.S. - LOC. TRICHIANA (MI)

COPIE A: TOC. NOV. REV.

CARD NUMBER

```
0123456789 0123456789 0123456789 0123456789 0123456789 0123456789 0123456789 0123456789 0
```

0053

```
  0  00  00  0  0 00 00 0 0000 0000  0000 0  0 0 0 00 00 0 0000  00  0 000000
    1  1   11 11 1  1  1 1    1    11    1 11 1 1 1  1  1 1    11  11 1
 2        2  2  2 22 22 2 2222 2222  2222 2  2 2 2 22 22 2 2222  22  2 2222
          333333333  3333 3  333 3  33  3 3 3333 3 3  3333 3  333   3333  33
4                                                                          4

         6          6    6 66   6 666    6 6  6   6  6    6 66  6 66    66
 7  7    77  77    7 7  7  77     77  777   7    7  7 7  7  77 7  77 7  77
      8 8 8  8 88 8  88   8888  8888 88     8 88   8  88   88888888  8 8888
         999 99999 999  99 99 9999999 9  9 999 9999 999  99 99  9 99 99 99 9   9
```

0054

```
  0  00  0 0000 00 00  0   0 0 0   0   0 0 0 0   0   0   00      0  0    0000 0
    1  1 11      1  1       11 1  11 1    11 1 111       1    111  1  1 1
 2        2222  2 2   2     2 2   2 2 2 2 2 2   2 2 2   2       2       2
          33 3   33 33  3     3     3     3 3     3 3     33 3   3  3    33
4
                                                                          5
         6  6 66  6 6   6     666       6  66     6       6 666     6  6
 7  7    77   77  7       7   77    7     77   7     7     7      77
      8 88  888 888 8 88  8 8 888   88888 8 8 8   8888 8 8 88 8   8     8
         9 99999  9 9   9 9  9 9   9 9    9 9   9 9         9 99 9     9
```

```
123456789 0123456789 0123456789 0123456789 0123456789 0123456789 0123456789 0123456789 0
```

0	1	2	3	4	5	6	7	8

COPIE A: TO:

IND. REV.

REV.

Honeywell

Honeywell Information Systems Italia

DIAGNOSTIC PROGRAM - CARD LISTING

4720710Y DSS 157 DISC MONITOR

CONT. SU FO. 228 FO. 227

```
CARD NUMBER
0055
0056
```

```
0123456789 0123456789 0123456789 0123456789 0123456789 0123456789 0123456789 0123456789 0
```

COPIE A: TO:

IND. REV.

REV.

SECTION: S.P.S. -

LOC.: PREGNANA (MI)

APPR.

COMPIL. MONDUCCI

EMISS. 9 JUL 71

N.° 4T4720709EA0

Honeywell
Honeywell Information Systems Italia

DIAGNOSTIC PROGRAM - CARD LISTING

4720710Y DSS 157 DISC MONITOR

CARD NUMBER

```
0         1         2         3         4         5         6         7         8
123456789 0123456789 0123456789 0123456789 0123456789 0123456789 0123456789 0123456789 0
0057
  0  00  0      0   0 00    00      0  0    00      0  0    00    0 0  0   00
    1  1       11  11  1    11    111  1    11    111  1    11     11  1
 2            2 2  2         2        2         2  2 2         2     2
        33  3 3 3   3  3     3  3   3  3    33  3   3  3    33  3 3 3  3      3
4                                                                              5
        66  66       6   666    66       66  6  66       66    66       6
 7  7    7  7            777    7       77  7  7       777 7  7       7
      8  88  8        888  88 8  8    888   8 8  8    888   8 8       888
        9  999 9 9 9     9     9 9 9     99    999 9     9    9 9 9
0058
  0  00  0 00    0 0  0  0   0 0  0    0 0  0      0  0      0  0 0 0 0   00
    1  1 1 11     11  1  1 111   1    111  1    11  1    11  11    11 1
 2              2 2    2  2    2    2  2    2  2 2  2    2  2
        33 333 3 3 3  3  3   3    3  3 3  3      3  3      3  3    3
4                                                                              4
                                                                               5
        66    66       66   66  6 666      66     6 666       6     6
 7  7    77    77        77        77     7 777      77            77
      8  8 88 8       8        8 888  8   8 8 88   888 88       8  88
        99   999 9   9   9 9   9  9 9 9      9 9     99 9 9 9   9 9
```

COPIE A:
TO:

IND. REV.

REV.

SECTION: S.P.S. -
LOC.: PREGNANA (MI)

APPR.

COMPIL. MONDUCCI

EMISS. 9 JUL 71

N.° 4T4720709EA0

Honeywell
Honeywell Information Systems Italia

DIAGNOSTIC PROGRAM - CARD LISTING

4720710Y DSS 157 DISC MONITOR

CONT. SU FO. 230 FO. 229

CARD NUMBER

```
0         1         2         3         4         5         6         7         8
123456789 0123456789 0123456789 0123456789 0123456789 0123456789 0123456789 0123456789 0
0059
  0  00     0 0 0  0   0   0    0  0  0     0      0  0     0      0  0   00
    1  1  1  11 1 1 1 1 1 11  1 11    11    11    111  1    11    111  1
 2          2 2 2                      2    2     2    2     2 2    2
        33  3 33   3   3   3     3  3  3  3  33 3 3 3  3  3  33 3 3 3  3  3
4
                                                                          55
        6  6   6    66  666 666 6  666   666 6 666       666 6 66       6
 7  7     7          7   7   7 77   7    77  7  7       77  7  77      7
      8  888 8  88 8   8  8     88 8   8 88  8 888    8 88  8 8888   8 88
        99   9 9      9       9 9   9 9 9   9 9 9  9 9   9   9   9 9 9 9
0060
  0  00     0    0 0  0    00  0 0 00    0 0  0    0 0   0 00      0  0    00
    1  1 1 11     11  1  1 1   111  1    11  1    111  11 1     11  1
 2                 2      2   2 2   2   2 2   2   2 2   2   2     2   2
        33  33 3 3 3  3    33  3 3  33   3 3  3     3  3  3   3 3  3
4
                                                                          5
        666 6 66       6  6 6 6   6   666     6 666       6 6 666       66  6
 7  7     77  7  7       77              77        777       7 77     7 77
      8     8 8888    8     88       888 8     8 8 88       888 8    888 8
        9  9 9 9 99 9    9   9 9 9  9   99 9  9   99 9 9 9     999 9     9
```

COPIE A:
TO:

IND. REV.

REV.

SECTION: S.P.S. -
LOC.: PREGNANA (MI)

APPR.

COMPIL. MONDUCCI

EMISS. 9 JUL 71

N.° 4T4720709EA0

Honeywell
Honeywell Information Systems Italia

DIAGNOSTIC PROGRAM - CARD LISTING

4720710Y DSS 157 DISC MONITOR

CONT. SU FO. 231 FO. 230

```
CARD
NUMBER      0         1         2         3         4         5         6         7        8
            123456789 0123456789 0123456789 0123456789 0123456789 0123456789 0123456789 0123456789 0
0061
                                                                                                
                                                                                                
              0  00  0  0   0 00      0  0    0 0  0  0   0 0  0    00  0    0  0  00 000
                1  1  111  11  1    111  1     11  1  1 111    1  1 1   111  1  1 1 1
            2          2  2   2   2 2   2   2 2    2   2        2    2        2   2 2
                    33  3   3  33   3 3  3    3 3  3  3   3    3    33  33 333  3  33
            4                                                                                   5
                       66       6 6 66      6 66       66   66   6  6 6 6   6  66    6
            7  7       7         7 77       77        77        77         7   77       7
                  8   8        8 8 8     888 8     8         8 8    88  8  88    8 88
                    99 9 9 9 9     999 9     9 9 9   9   9 9       9   9 9     9      9
0062
                                                                                                
              0  00  00   0   0    0    0    0                                          00
                1    1       11   111 1      111
            2                 2    2 2        2 2
                  3333  33  3 3    3          33
            4                                                                                   5
                   6 6   6   6       6   6  6
            7  7   7 7   7 7 7              77
                  8  88  88  88   8        88 88  8                                          8
                   99       99    9   9 9   99 9
            123456789 0123456789 0123456789 0123456789 0123456789 0123456789 0123456789 0123456789 0
```

COPIE A: TO:

IND. REV.

REV.

SECTION: S.P.S. -

LOC.: PREGNANA (MI)

APPR.

COMPIL. MONDUCCI

EMISS. 9 JUL 71

N.° 4T4720709EA0

Honeywell
Honeywell Information Systems Italia

DIAGNOSTIC PROGRAM - CARD LISTING

4720710Y DSS 157 DISC MONITOR


```
CARD
NUMBER
          0         1         2         3         4         5         6         7         8
          123456789 0123456789 0123456789 0123456789 0123456789 0123456789 0123456789 0123456789 0
0063
                                                                                          00
            0  00   0 0
               1    111
          2         2 2
                    3 3
      4
                                                                                            5
                    6
      7  7          7
            8        8
               9     9                                                                      9
0064
                                                                                          00 0
            0  00     0
               1      1
          2
                    3 3
      4
                    666                                                                     6
      7  7          777
            8       88
               9     9
          123456789 0123456789 0123456789 0123456789 0123456789 0123456789 0123456789 0123456789 0
          0         1         2         3         4         5         6         7         8
```

COPIE A:
TO:
IND.
REV.
REV.

SECTION: S.P.S. -
LOC.: PREGNANA (MI)

APPR.

COMPIL. MONDUCCI

EMISS. 9 JUL 71

N.° 4T4720709EA0

Honeywell
Honeywell Information Systems Italia

DIAGNOSTIC PROGRAM - CARD LISTING

4720710Y DSS 157 DISC MONITOR

CONT. SU FO. 233 FO. 232

```
CARD
NUMBER      0         1         2         3         4         5         6         7         8
            123456789 0123456789 0123456789 0123456789 0123456789 0123456789 0123456789 0123456789 0
0065
                 0  00  00  0  0  0 00  0     00  0  0  0  0 00  0     00  0  0  0  0 0000
                   1  1  1  1  1  1 11  1  1  11  1  1  1  11  1  1  1  11  1  1  1  11 11    1
               2       2  2  2  2 22  2  2  2  2  2  2  2 22  2  2 22  2  2  2  2  2
                        3     3    33  3     33  3  33     3 33  3     3  3  33     3 33
            4

                        6  6 66  6 66  6 6    6  6 66  6     6  6 6   66  6 66  6     6  6
             7  7    7     7           7  7     7 7   77  77    7  7     7 7  77  7
                   8  88        8 8     8  8     8  8  8  8     8  88     8  8 88
                        9 999     99   999  9  9  9  999  9  9999  9  99     9 9  9
0066
                 0  00  0  0     00  0  0  0  0 0 0                                  00
                   1    1  1  1 11  1  1  1 11 1 11
               2     2 2  2  2 22  2  2  2  2 2 22                                    2
                        3     33  3  33     3
            4

                        6  6 6  66  6 66  6     6 6 6                                 6
             7  7    7    7  7    7 7  77  7  7
                   8  8  8  8  8  8  8  8 88  88  8
                        9  999  9  9    999  9  9
            123456789 0123456789 0123456789 0123456789 0123456789 0123456789 0123456789 0123456789 0
            0         1         2         3         4         5         6         7         8
```

COPIE A: TO:

IND. REV.

REV.

SECTION: S.P.S. -

LOC.: PREGNANA (MI)

APPR.

COMPIL. MONDUCCI

EMISS. 9 JUL 71

N.° 4T4720709EA0

Honeywell
Honeywell Information Systems Italia

DIAGNOSTIC PROGRAM - CARD LISTING

4720710Y DSS 157 DISC MONITOR


```
CARD NUMBER   0         1         2         3         4         5         6         7         8
              123456789 0123456789 0123456789 0123456789 0123456789 0123456789 0123456789 0123456789 0
0067
                0  00   0    00     0    00     0  0  0  0  0     0  0  0    0  0 00  0 00
                  1  1 11    11     1  1 11     1    1    1  1 11    11  1  1  1  1  1
              2          2 22  2 2   2 2   2       2   2                       2
                       33  3 333 3 33  3 33  3  3    33  3  3     3  3  3    3    33       3
              4

                       6   6 66  6 6     6   6       6   6     6                    6       6
              7  7     7  7  77 7 77   7 7 777      77   7    7 7     7   7        7   7
                    8 888    88     8 8  88  8  8 8  88 88  8     8 88 88  8  8 88888 888
                      9  9       9 9 99    9    99    99   9    99           9999  999

0068
                0  00  000  0  0     00  0   0   0  0  0     0   0  0  0  0  00
                  1  1   1  1 1   11    11  1  1  1   1  1  11    111  1  1 11  1
              2        2  2        2       2    2       2       2
                       333    3   3 33  3    3   3  3  3   3 33   3 33  3  3
              4                                                                  4

                       66  6                6   6  6  66  6  6                6       6
              7  7     77   7 7 7      77  77 7  7  7 7 7 777 77  777 7  7    77 7 7
                    8 8888 8      88 888  8   88 8 88  88  8  8  8 8 88  8 88
                      999 99   99 9 9     9   9                9  9  9   99  99
```

COPIE A:
TO:

IND. REV.

REV.

SECTION: S.P.S. -
LOC.: PREGNANA (MI)

APPR.

COMPIL. MONDUCCI

EMISS. 9 JUL 71

N.° 4T4720709EA0

```
CARD
NUMBER      0         1         2         3         4         5         6         7         8
            123456789 0123456789 0123456789 0123456789 0123456789 0123456789 0123456789 0123456789 0
0069
                0  00  0   0 00    0 0  0  0  0  0  0  0 0 0 0 0 00    0  0  0  0  0  0 00
                  1  1 1 111 11     11  1  1  1  1  1  11 111 11  1  1  1  1  1  1  1
              2       2     2       2  2  2 22  2 2   2 2     2 22    22  2 22    2   2
                          3 33      3  33   333   33        3 3  3    333   333 3 33
            4
                                                                                      5
                       6         6   66    66  6 6    6   6    6    66  6 66  6 6   6   6
            7  7      77        7   7 7   7 7   7 7   7    7   77 7 7 7   7 7  77     7
                8 8  88 8 8     8  88 8  88 88 8  8   8 8 8 888  8 88 8  88 88 88 88
                  9   9 9       9     99 9  99  999   9 9 9 9         99    99 9 99
0070
                0  00   00  0 00    0 00      0                                  00
                  1      1  1   1 111 11     11
              2       22   2 2     2  2  2 2 2
                    3   3     33     333 3 3 3
            4
                    6  6             66  6 6                                    66
            7  7   77       777 7   77 7 77      77
                8    8 8  8   88 8 8     8    8 8
                   9  99   99  9 9    9  9   9
            123456789 0123456789 0123456789 0123456789 0123456789 0123456789 0123456789 0123456789 0
            0         1         2         3         4         5         6         7         8
```

COPIE A:
TO:

IND. REV.

REV.

SECTION: S.P.S. -
LOC.: PREGNANA (MI)

APPR.

COMPIL. MONDUCCI

EMISS. 9 JUL 71

N.° 4T4720709EA0

Honeywell
Honeywell Information Systems Italia

DIAGNOSTIC PROGRAM - CARD LISTING

4720710Y DSS 157 DISC MONITOR


```
CARD
NUMBER
         0         1         2         3         4         5         6         7         8
         123456789 123456789 123456789 123456789 123456789 123456789 123456789 123456789 0
0071
   0  00       0  000          0          0 0 0 000 0          0        0   00
     1  1 1 1 1    1 111111111 1111111111 1 1 1   1 111111111111 1111111 111
  2           2   2           2          2 2 2 222 2           2        2
            3  3                 3                 3  3                  3
4

             6       6           6                 6  6                   6
 7  7    77            7           7   7           7 777 7 7 7            7
       8            8    8           8    8                8       88 8 8 8
             9       9      9           9    9                9       9

0072
   0  00  0                                    0   0                     00
     1     111111111111111111111111111111111 1
  2     2                                     2
                                        3      3
4

            6         66666666666666 6666666 6 6                          6
 7  7   777  7    7777    7777  7777   77777777
       8   8 8  88  88  88  8888  88 88  888 8                           8
           9    9 9 9 9 9 9 9 9 9 9 9  9 9 99

         123456789 123456789 123456789 123456789 123456789 123456789 123456789 123456789 0
         0         1         2         3         4         5         6         7         8
```

COPIE A:
TO:

IND. REV.

REV.

SECTION: S.P.S. -
LOC.: PREGNANA (MI)

APPR.

COMPIL. MONDUCCI

EMISS. 9 JUL 71

N.° 4T4720709EA0

Honeywell
Honeywell Information Systems Italia

DIAGNOSTIC PROGRAM - CARD LISTING

4720710Y DSS 157 DISC MONITOR


```
CARD
NUMBER
          0         1         2         3         4         5         6         7         8
          123456789 123456789 123456789 123456789 123456789 123456789 123456789 123456789 0
0073
  0  00   0    00  0  0    00  0  0  0 00  00  0 00  0 00  0 00    00  0  000
    1  1  1    11    1    1    1    1    1  1    1    11    11  1  1
 2             2   2    2 2  2    2  2  2   2  2  2 22  2       2   2
          3  3 33  3  3    33  3  3  3 33  33  3 33  3 333 3  3    33  3  3
4

        6    6  6    6  6    6  6    6 66  6    6 6  6 66  6    6
 7  7   77  77 7 77    7 7  7    7 77  7  777  7  77 7 77  7 77  77  7
     8  8  8 88  8  8  8 88  8  8  8  8  88   88   88    8  8 88  8
       9  99   99   99 9  9   99 9  99 99 99 99    9999 99 9  9  9  9
0074
  0  00    0  00  0 0  0  0 00  0 0 0  0  0  00  0 00  0 0 0  00 0 0 00 00 0
    1  1 1  1     11 11   11   111 1   1  1   11   111 1   11  1
 2          2     2  222 2  2  2  2    2 2 222 2  2  2  2 2  2   22
          3 3  33 3   3  3  3  3  3 33  3  33  3  3  3  3  3  3  33
4

        6  6    6  66  6  6  6    6   6  6 66  6 6  6  6  66
 7  7   77 77  777 7  77  77777 7 77  777 7  7  777 7 7 7  777 7  7   7
     8   88    88  8  88  8  8    88  8   8  8  8   88  8
       9999 9 9 9 9 9 9  999999 9 9 9 9 9 9 9 9  99999 9 999 9 9 9 9 9  9
```

COPIE A: TO:

IND. REV.

REV.

SECTION: S.P.S. -

LOC.: PREGNANA (MI)

APPR.

COMPIL. MONDUCCI

EMISS. 9 JUL 71

N.° 4T4720709EA0

Honeywell
Honeywell Information Systems Italia

DIAGNOSTIC PROGRAM - CARD LISTING

4720710Y DSS 157 DISC MONITOR


```
CARD
NUMBER
         0         1         2         3         4         5         6         7         8
         123456789 123456789 123456789 123456789 123456789 123456789 123456789 123456789 0
0075
  0  00  0 0 00  0 00  0 0 00  0 00  0 0 0 00    0 0          0         00 000
    1  1     11    1    11  1    11    111  1     11         11    11  1  1    1
 2          2  2  2    2 2 222 2  2  2   2       2 2                  22 2
            3  3  3  3  3   33  3  3  3   3 33    3 3           3     3 33
4

        6 6  6  6    6    6  6 66  6    6    6              6    6   6
 7  7   77777 7 7 7 777   7   777 7 7 7   7     7                7 7   7 7   7
      8  8    8  8 8 8 88   8     8  8 88   88   88              8 8    8
        9 99999 9 9 999 9 9   99999 9 999 9    999          9     9  999 99
0076

  0  00  0 0  00  0 0 0 000 00 00 0 0 0 0 0   0  00 0 0   00  0 0 0 00 000000
    1  1 11 11  11 1 1 1   1  1  1 1 1 1 1 111 11  1 1 111  11 1 1 1  1
 2          2  22  2 2 2 222 22 22 2 2 2 2 2   2  22 2 2   22  2 2 2 22 2222   2
           3 333 33 3 3 33  3 33 33 3 3 333 333 33 33 3 333 333 3 3 33 3
4

        666    6   6    6 6   6    6    6   6 6   6 6   6    6    6   66
 7  7   77  7     7   77  7 7 7   7   77 7    7 7 7 7     7 7   77  777    7
      8  8    888 8    8 8  8  8 8    8   8    8    8  8  8    8  88
        99999   9 9999 999 99 999 9999 9999 999 99 9999 99999 9999 99999 99
```

COPIE A:
TO:
IND. REV.

REV.

SECTION: S.P.S. -
LOC.: PREGNANA (MI)

APPR.

COMPIL. MONDUCCI

EMISS. 9 JUL 71

N.° 4T4720709EA0

```
CARD
NUMBER      0         1         2         3         4         5         6         7         8
            123456789 0123456789 0123456789 0123456789 0123456789 0123456789 0123456789 0123456789 0
0077

  0  00      0 0 0000   0 0000 0 0 00   00 0 0  0000 0000000 0   0    0  0 00
    1  1  111 1 1    111 1    1 1 1  111  1 1 11    1       1 111 1111 11 1
 2          2 2 2222   2 2222 2 2 22   22 2 2  2222 2222222 2   2    2  2
         3333 3 333  333 3    3 333  333  3 3 33  333 3   3333333 3333 33 3    3
4

            6       6  6  66   6   66    6   6  66   6 66    6  6    6 6
 7  7    7 7     7  7 7  7 77777   777 7 7 777 7 77     7777    7  7 77   7    7
       8 8    8 8 888     8888   8 88   8       8888  8888 8 8
          9 99 9999 99 99 99 99999999 9 999 999 99 9999999 9 9 9 999 99 99

0078

  0  00  0000 0 0 0000  0 00 00 0000 000000  0 0  0  0 00 000 0000 0 0 0000
    1  1 1    1 1 1    11 1  1  1    1      111 1 11 11 1  1   1    1 1 1
 2        2222 2 2 2222  2 22 22 2222 222222   2 2  2  2 22 222 2222 2 2 22
         3    3 333  3333 3  3333  333 3    333 3 33 33333 333 3    3 333
4                                                                          4

          66   6   666 6    6    66   6 66    6          6   6 66   6   66
 7  7    7 77777   777   77 7 7   77    777   7   7  7  77   7  77777   777  7
       8 8 8888   8 8888    8  88 8888  88888 8   8  8 88    8   8888   8 88
         999 9999999999 99 999   99 999999999999 99 99999 9   9 99 99999999
```

Honeywell
Honeywell Information Systems Italia

DIAGNOSTIC PROGRAM - CARD LISTING

4720710Y DSS 157 DISC MONITOR

CARD NUMBER

```
0         1         2         3         4         5         6         7         8
12345678901234567890123456789012345678901234567890123456789012345678901234567890123456789 0
0079

  0  00  0  0 00 00 0 0000 00000 0 0    0 0  0000  0000  00 0 0  0000  00  00
    1  1  11 1  1  1 1    1     1 1 1111 1 11    11    11  1 1 11    11  11
 2          2 22 22 2 2222 22222 2 2    2 2  2222  2222  22 2 2  2222  22
          33333  3333 3  333 3   3 3 3333 3 3333  33   333  3 3 33  333   33
4                                                                                  5
                 6    6 66   6 66  6 66 6   6         6    6  6  66  6 66
 7  7    7  7  7 7  7  77     7777          7  7    7 77  7 777 7 77 7  77 7  7
       8 88  8 8  88   8888  8888     8 88    8 88  8 8  8       88888888
          99 999  99 99 999999999 999999999   999 99 99 999 999 99  9 99 9

0080

  0  00  0 0000 000000  0 0  00 0 0  0 0 00  00 00 0000  00 0  0 0000 0000000
    1  1 11    1      11 1 11  1 1 11 1 1  11  1  1    11  1 11 1    1
 2          2222 222222  2 2  22 2 2  2 2 22  22 22 2222  22 2  2 2222 22222
          33  333 3  3 3333 33 33 333333333333  3333  333   3333 3  333 3
4

          66   6 66    6      6  66         6    66  6 66  6   66   6 66    6
 7  7    7  77     77 7    7 777         7    7 7   77 7  77   77 77     777  7
       8 88 8888  88888 8 88  8    8  8 8 88  8  88 88888888 8    8888  8888
          9 99 9999999  9 999  999 9 9  99 9  999   99  9 99 9 99 99 9999999
```

COPIE A: TO:

IND. REV.

REV.

SECTION: S.P.S. -	APPR.	COMPIL. MONDUCCI	EMISS. 9 JUL 71	N.° 4T4720709EA0
LOC.: PREGNANA (MI)				

Honeywell
Honeywell Information Systems Italia

DIAGNOSTIC PROGRAM - CARD LISTING

4720710Y DSS 157 DISC MONITOR

CARD NUMBER

```
0         1         2         3         4         5         6         7         8
12345678901234567890123456789012345678901234567890123456789012345678901234567890
0081
  0  00   000 0  0 0 0 000   0 0 00  00 00 0 0000    0 0000 0000    000 0 000
    1  1     1 11 1 1 1   111 1 1  11  1  1 1    1111 1    1    1111   1 1
 2        222 2  2 2 2 222   2 2 22  22 22 2 2222    2 2222 2222.   222 2 2
        3 3 3 3333 3 333 33333333333  3333 3  333 3333  333 3  3333 3 3 3
4

          6 6  6   6   6           6    6 66  6     66   6 66      66
 7  7   7777   7    7   7   7   7    7 7  7  77 7   7  77     77        777  77
      8 8 8     8 88   8   8 8 8 88  8  88   888888  8 8888  888    88
        9   9 999 9999   9 999 99 9  999  99 99  9  99 99 999999   99999 99

0082
  0  00   0 00  00 0  000 0 00 0 0                                      00
    1    1 1  11  1 11   1 1
 2        2 22  22 2  222 2 22   2
       3 333 333 3333333 3 3 3 3 3
4

          6  6 6 6     6      6 6
 7  7   777  7  7 7  7 7  7777  7 7                                      7
      888 8 88   8 8   8     8888                                       8
       99999 9 99 9 99 999 999 9
```

COPIE A:
TO:
IND. REV.

REV.

SECTION: S.P.S. -
LOC.: PREGNANA (MI)

APPR.

COMPIL. MONDUCCI

EMISS. 9 JUL 71

N.° 4T4720709EA0

Honeywell
Honeywell Information Systems Italia

DIAGNOSTIC PROGRAM - CARD LISTING

4720710Y	DSS 157 DISC MONITOR	CONT. SU FO. 242	FO. 241

CARD NUMBER

```
         0         1         2         3         4         5         6         7         8
123456789012345678901234567890123456789012345678901234567890123456789012345678901234567890

0083
   0  00  000  0 0   0 0  0 0      0        0 0      0     0     0     0    00
     1  1  11  1 1  1111  1 1 11   1         11 1  1  1  1  1  1  1  1  1  1
  2       22 2    222 2  2 2            2
          33  3333  3 3  3 3  3    3     3     3
4
          6  6 6 6 6           6      6          6  6  6  6  6          6  6
 7  7    7  777777 7              77   77    7   7  7  7    7  77 77 77       7
       8 88  88 8 8 888888888  8  8     8    8 8 8    8  88     8 88 8   8
         99   9 9            9   99 9   9  9 9   9 99    9   9 99    9   9 9   9

0084
   0  00  0 0             0  0  0  0                                        00 0
     1  1 1    1 11  1  1 11 11  1  1 11 11   111   1
  2       2         2     2     2     2     2       2
          3                                    3    3
4
          6  6  6  6  6                6  6  6      6
 7  7    77  7           7 77 77 77 7           7  77                    7
       8 8   8  8  8 8  88  8    8  88  8    8  8 88               8  8       8
         9 9 9  9 9   9 99    99    99    99 9     9            9     9

123456789012345678901234567890123456789012345678901234567890123456789012345678901234567890
         0         1         2         3         4         5         6         7         8
```

REV.

COPIE A: TO: | IND. REV.

SECTION: S.P.S. - LOC.: PREGNANA (MI)	APPR.	COMPIL. MONDUCCI	EMISS. 9 JUL 71	N.° 4T4720709EA0

Honeywell
Honeywell Information Systems Italia

DIAGNOSTIC PROGRAM - CARD LISTING

4720710Y DSS 157 DISC MONITOR

CONT. SU FO. 243 FO. 242

```
CARD NUMBER   0         1         2         3         4         5         6         7         8
              123456789 0123456789 0123456789 0123456789 0123456789 0123456789 0123456789 0123456789 0
0085
                0  00                        0          0          0000 00  0  00 00  0  00 000
                  1  1                 11    11   1    1        11    1  11 11  1  11 11  1     1
              2        2                 2                2         2222 22  2  22 22  2  22 2
                       3                 3    3   3    3        333 3333 33 333 3 333 333 33
            4

                     66        6  6          6                    6  6   6  6     6  6
             7  7    77  7  7          7  7   7               7 7              7 77    7
                 8      8  8       8 88  8 8 8     8          8  88  8  888 8   88   8 8 8  8
                     99     9     9  99                        9 99  9999 9 9999  99   99
0086
                0  00  0     00 0  0  0         0 0  000  0 0 0 0   0      000 0  0000
                  1  1 1 11111  1 11 11111 11111111 1 11   111 1 1 11 111 111111   1 11
              2        22     22 2  2     2        2 2  222  2 2 2  2   2      222 2  22   2
                       33333333 3 33 33   3333333  333333  3  3333 333333333333 333 3333
            4

                     66      6 6   6     6 6     6     6   6   66 6     6    6   66 6
             7  7    7 77      777         7 7     7  7     77  7  7    7 77  77  7 7
                 8  88    8 8            8        8 8 888   8     8    8       8    8 8  8
                       9   9 999 99     9  99    9  999 9   9 9999    999 99 99 9999
```

123456789	0123456789	0123456789	0123456789	0123456789	0123456789	0123456789	0123456789	0
0	1	2	3	4	5	6	7	8

COPIE A:
TO:
IND. REV.
REV.

SECTION: S.P.S. -
LOC.: PREGNANA (MI)

APPR.
COMPIL. MONDUCCI
EMISS. 9 JUL 71
N.° 4T4720709EA0

Honeywell
Honeywell Information Systems Italia

DIAGNOSTIC PROGRAM - CARD LISTING

4720710Y DSS 157 DISC MONITOR

CARD NUMBER

```
0087

  0  00  00 0  0                                  0   0    0    0 0 0 0 00
    1  1   1 11 11111      1111111111111111 11   1 1   111              1
 2        22 2  2                                2    2    2    2   2 2
          3 3333 33333                3333333 3  3333   333      3      3 3    3
4

         6666   6                    66         666 6     6 6    6      6
 7  7     7   7  7 7              7777     777  7 777    77 7  7  7 7 777
       8  8  8                   88  88   88  8 8 8888    88  8 88  8 8 8888 8   8
          99999 999   9  9   9 9 9 9 99 9 9     999    99    99  9 9 9 99  9

0088

  0  00    0 0 0 0 0  0    00    0 0   0    0    00  0   0 0     0   0     00
    1  1     111  11 11    11    111       11         1  1    111  11   1
 2          2   2 2 2       2     2 2           2 2   2 2         2 2 2   2
          3 33 333 3  3  3 33 3  3 3        3    33  3           3   333 3
4                                                                          4

         6  6 6      6   66 6   6 6      6    66 66  6  6   6    6    6666
 7  7     7 7   77  77     7     7                7 77                   7
       8   8888  888   8  8 88 8  88   8 8 8 8   888 8 8  88 8 8 8   8  88  8  8
         9 9 9 9 9 9    99    9    9          99 9  9 9 9      9 9 9   9 9
```

COPIE A:
TO:
IND.
REV.

REV.

SECTION: S.P.S. -
LOC.: PREGNANA (MI)

APPR.

COMPIL. MONDUCCI

EMISS. 9 JUL 71

N.° 4T4720709EA0

Honeywell
Honeywell Information Systems Italia

DIAGNOSTIC PROGRAM - CARD LISTING

4720710Y DSS 157 DISC MONITOR

CONT. SU FO. 245 FO. 244

```
CARD
NUMBER      0         1         2         3         4         5         6         7         8
            123456789 0123456789 0123456789 0123456789 0123456789 0123456789 0123456789 0123456789 0

0089

  0  00   0       0 0       0 0   0   0 0 0           0 0   0    0    0 0  00
    1  1 1  1 1 1   1                                1   1 1   1 11    111
 2        2       2    2 2   2         2 2       2       2              2
                   3                 33333333 3 33333 333 333 3 3 33     3
4
                                                                                5
        6 66 66666666666666666666 6      6       6   6   6     6   6 6
 7  7      777 777 77777 7777777 7 7    7 77 777 7 7  7  7 777777 7 77
       8  8           8 8   888 888888888 8 8 8    8888       88 8  8       8
        999 9 9 9 9 99999999999 9 9 9 9 9 9 9 9 9 9 9 99999 9 9 9  9 9 9

0090

  0  00  00    0 0  0    0 0   0  0     0  0     0  0     0   0 0   0   00
    1  1  1    111  1    111  11  1    11  1    11  1    111  11    11  1
 2             2 2      2 2   2   2    2   2   2 2   2   2 2   2     2 2
          33     3  33   3 3   3  33    3  33   3 3  33   3 3   3     3
4

        6    6        6              6        6                66   6     6
 7  7      7 77      7 777          77       77     7  7
       8  88 8       888          88888    8 8888   8 888        8 8  8   8
        9    9 9 9    999 9 9 9      9 9  9   99 9  9   99 9 9 9   9 9 9

            123456789 0123456789 0123456789 0123456789 0123456789 0123456789 0123456789 0123456789 0
```

COPIE A:
TO:
IND. REV.
REV.

SECTION: S.P.S. -
LOC.: PREGNANA (MI)

APPR.
COMPIL. MONDUCCI
EMISS. 9 JUL 71
N.° 4T4720709EA0

Honeywell
Honeywell Information Systems Italia

DIAGNOSTIC PROGRAM - CARD LISTING

4720710Y DSS 157 DISC MONITOR

CARD NUMBER

```
0         1         2         3         4         5         6         7         8
123456789 0123456789 0123456789 0123456789 0123456789 0123456789 0123456789 0123456789 0
0091
  0  00  00   0 0 0 0  0    00   0  0   00     0  00   0  0    00 000  0  000
    1  1 11 1      11  1  1 1     1 11   1              1 11    1   1   1 1
 2        2   2 2   2              2 2 2                  2   2   2     2
          3 3 3 333 3 333   33   33      3 33333 333 3 33 3    3333333 3  3
4

        6   6 6 6    66    6   66      6    6 6       6   6  6        6   6
 7  7       7   77    7        777       7 7 7    7  7 7  7       7  7        7
      8  8 88888 888   8      8 88  888 8 888 8 8 888  8  888 8 8 888  88      8
        99 9  9    9 9          99  99   999999   9   99   9      9  9
0092
  0  00   0  0 0 0 00  0 00  0    0  00  0 0 0 00  0 00    00      0 00  0000
    1  1  1  1 111  1    1 1 11  1 1 11  1 111  1    11  1  1  1 111      1
 2          2 2 2 2    2   2 2    2  2 2 2 2    2      2
          3  3   3  3  3  33      3  33  3   3  3  3  3  3 33  3 3    3  33
4

        6    6     6  66 6   6  66   6   6 6   6  66 6   6666  6 6  66  66
 7  7     7        7       7      7           7              7
      8 8 88  88   88 88 8  8 8 888   88  8    88 88 88 88888 88888 8 8 8 8  88
            9 99      9  9   9          9  9          99   9 9 999    9
```

COPIE A:
TO:

IND. REV.

REV.

SECTION: S.P.S. -
LOC.: PREGNANA (MI)

APPR.

COMPIL. MONDUCCI

EMISS. 9 JUL 71

N.° 4T4720709EA0

Honeywell
Honeywell Information Systems Italia

DIAGNOSTIC PROGRAM - CARD LISTING

4720710Y DSS 157 DISC MONITOR

CARD NUMBER

```
0093

  0  00     0   0 00    00    0 0 0 0  0  00  0 0 000       0      0       000
    1  1 1    111  1  1  1  1  11 11  1        11   1 11   11 1    1  1 111
 2              2    2    2   2 2   2   2   2 2 2   2   2 2      2  2 2 2
            3 3 3 33  3 33  3 3 3333   333 3 3  3333  3 3 3 333    3  3 3 3
4

        6  66 6  6   6666  6666      66 6 6   6    666  6         6 6666
7  7     7        7         7         7  7   7   777  7  7        7  7
      8 8  8 888 8 8 88888 8 88  8 8 888 888 88  88 88 8 88  8     8 8 888    8
        9  99 9      9 9    99 9 9     9   999 9 9   9   9   9        99     9

0094

  0  00  0  0  0 00  0   0 0     0  0  0    0  0  0    00 00  0 00  0 00  00 0
    1  1   11     1    111 1    11   1  1   1  1  1  1 1 1  1     1  1 11
 2              2      2       2 2   2 2 2   2     2 2 2 2   2 2   2 2
            33  3 33  3 3 33      3 333 3   33 33  3  3 333  33    3    33
4

        6 66  66666 66 6          6    6  6      6       6          6 66
7  7     7 77     7        7        7 7  7  7    7  7 7 7  777  7777  77    7
      8 88888 8 8 8 8 88        8 88  8 8 888   88888 8 88888888888    8 8
          99    9  99 9        9   9   9    9999999 9  99  9999  99  9  9  9
```

0	1	2	3	4	5	6	7	8

COPIE A: TO:

IND. REV.

REV.

SECTION: S.P.S. -

LOC.: PREGNANA (MI)

APPR.

COMPIL. MONDUCCI

EMISS. 9 JUL 71

N.° 4T4720709EA0

Honeywell
Honeywell Information Systems Italia

DIAGNOSTIC PROGRAM - CARD LISTING

4720710Y DSS 157 DISC MONITOR

CONT. SU FO. 248

```
CARD
NUMBER     0         1         2         3         4         5         6         7         8
           123456789 0123456789 0123456789 0123456789 0123456789 0123456789 0123456789 0123456789 0
0095
                                                                                                
             0  00   0  00     00    0  0 0 000 00    00    0  0  00  000 00    00  0    00
               1  1 11 11     1 1 1 1 111 1 1 11    1   111     1   1 1 11    1 1 11       1
           2        2          2       2 2     2     2 2          2 2   2       2
                    3  3      33 33    3  33 33     33 3 3 33  33  333  3     3      3
           4
                                                                                                
                  6        6            66  6   66        66  6   66  66  66 6      66
           7  7     77 7   7    777  7   7  77 77777  77   7  77  7   77 7777 7  7   7
                8 88 8 8 8 888 8   8 8 888   8 8 8 8 8 8 888   8   8  88 8 8  88 8 88
                    99    99 9  9 9   9       9    9   9 9 9    9   9   9    999   9 9   9
0096
                                                                                                
             0  00   00 00    0 0  0   00  0  000 0 0 00  00    000    0    00    00  00
               1  1   1 11    111       1   1 1 1  11      1     11   1     1     1
           2        2     2         2 2       2                2 2 2   2  2 22  2 2      2
                    33 33        33  333 33   33   3  3   3  3 33    33 3 333 3 33
           4
                                                                                                
                  66  66  66    66  6  66 6 6  66  6   66  6  6 6    6 66 66 6  6  6
           7  7       7  77777      7  7 77    7   7  7   77777    7   7 7  77 7
                8 8 8   8 8 8 8 88888 8  8 8888  88 888  888888888  8 8 888 8888  8
                  9    9    9 9 9  9    9999     99 9    9 99 9 99     9999  9999999  9
```

COPIE A: TO:

IND. REV.

REV.

SECTION: S.P.S. -	APPR.	COMPIL. MONDUCCI	EMISS. 9 JUL 71
LOC.: PREGNANA (MI)			N.° 4T4720709EA0

Honeywell
Honeywell Information Systems Italia

DIAGNOSTIC PROGRAM - CARD LISTING

4720710Y DSS 157 DISC MONITOR


```
CARD NUMBER   0         1         2         3         4         5         6         7         8
              123456789 0123456789 0123456789 0123456789 0123456789 0123456789 0123456789 0123456789 0
0097
                0  00      0 0  0  00    0  00    0      0     00  00     000 00  0 00   0 00   000
                  1  1 1  111      1        1 1 11  1  1  1 1    11  1    1  1      1  1 1 1 1
               2          2   2 2   2             2   2  2  2         2 2 2 2   2 2   2 2   2
                          3     33   3  33  33  33  3  33 3 33  33  3 333  3     3    33  3   3
              4

                     66     6   66  66  6  6      6 6    6  66   6 6 6   6      6 66   6
               7  7     77    7  77  7   77 777  77  7 777   7   7 77 777  7777  77
                   8 8 8888 8 8  88  88   888 8 88  8 88888   8 8 8888888 88888     8
                     99 9 9 9    9  99   9  99 99  99 9999   9 99 9  99  9999  99  9      9
0098
                0  00  00  0 0 0 00    00  0 00    00     0     0     0     0  0   00    00
                  1  1  1  1  11  1  1 11  1 11  1 11  1 11  1 11  1 11  1 1 1  1  11  1
               2          2 2 2 2  2 2    2  2    2 22  2 22  2 22  2 2  2 2  2  2
                          3 3 3 3  3  3  3  3  3  3 33  3 33  3 33  3 33  3    3  3
              4                                                                          4

                     66   6 6  6    6    6    6    6    6    6      6 666
               7  7         7  7  7    77   7    7 7 7 7 7 7 7 7 7 7 7 7  7  77 7 7
                   8 8888  88   88 8  88 8  88 888 8 88888 88888 88888 8888  8 8 8 8 8 8
                     9    9  9    99   99  99  9  9 9  9 9  9 9  9 9 9  9 9  9 9  9
              123456789 0123456789 0123456789 0123456789 0123456789 0123456789 0123456789 0123456789 0
              0         1         2         3         4         5         6         7         8
```

COPIE A:
TO:
IND. REV.
REV.

SECTION: S.P.S. -
LOC.: PREGNANA (MI)

APPR. | COMPIL. MONDUCCI | EMISS. 9 JUL 71 | N.° 4T4720709EA0

Honeywell
Honeywell Information Systems Italia

DIAGNOSTIC PROGRAM - CARD LISTING

4720710Y DSS 157 DISC MONITOR

CONT. SU FO. 250 FO. 249

```
CARD NUMBER   0         1         2         3         4         5         6         7         8
              123456789 0123456789 0123456789 0123456789 0123456789 0123456789 0123456789 0123456789 0
0099
                0  00  000    00  00  0    00 00    00  0 0 0 00    00    00       0    000
                  1  1 111  1 1 1     1    1  1  1 11  1 111  1  1 11  1 1 1 11   1  1 1
              2         2  2     2   2 2 2 2 22  2     2   2 2   2 2   2     2 2  2  2
                       33  3 33  33      333  3  3 33  3   3  3     3     3      333   3
              4                                                                        5
                     66 6        6  66  66  666       6     6   6 6   6     6  6 6  6 6
              7  7     77 7 777  7  77  7   777 7 77     7  7   77    77 77 77  777 777
                   8 8888 8 88  8 8   8   8   8 8 8888  88   88 8   8 888   888  88 888
                     99   9 9999 9   99      99 9 99 9    9    999 9  99 99 999    99 99  9
0100
                0  00   0    0 0 00  0 0 0 00    00    0    0    00  0       0  00  0000
                  1  1  1  1 111 11  1 111  1  1 11  1 11  1 11  1 1 1 11  111 1   1   1
              2        2  2   2 2   2   2 2   2 2   2 2   2 22  2       2
                       3    3 3 33  3   3  3  3  3  3  3  3 333 3 33       3  33  33   3
              4
                     666  6 6  66   6 6   6   6 6   6 6    66    6 6 6  6   6 6  66  66   6
              7  7   77  777    7        7   7     7 77  777 7 777 77    77  777 777 777
                   8   8 88888 8888  88   88 88  8 8 8 8 88888 8888 8888   8   8 8 8 888
                       9999999 9  9    9    99  9 99 99 99 9 9 999999  9   9     9   9    9
              123456789 0123456789 0123456789 0123456789 0123456789 0123456789 0123456789 0123456789 0
              0         1         2         3         4         5         6         7         8
```

COPIE A:
TO:
IND. REV.
REV.

SECTION: S.P.S. -	APPR.	COMPIL. MONDUCCI	EMISS. 9 JUL 71	N.° 4T4720709EA0
LOC.: PREGNANA (MI)				

Honeywell
Honeywell Information Systems Italia

DIAGNOSTIC PROGRAM - CARD LISTING

4720710Y DSS 157 DISC MONITOR

CARD NUMBER

```
0         1         2         3         4         5         6         7         8
123456789 0123456789 0123456789 0123456789 0123456789 0123456789 0123456789 0123456789 0
0101
  0  00     0   00     0     0    00   0  00   0   00  00   0  0  0 0 0   000
    1  1 1  11  11  1 11  1 11  1 1   1   1        1 1 1 111      11   1
 2            2   2 222 2 22  2     2   2  2     2   2   2         2   2
            3 3 33  3 33  3 33  3  3  33   3 333 3333  33   3  3 333
4
        66  6  66   6  6  6 66  6     6  66        666 666  666  6  66  66
 7  7   77 77   7  777 7 7777  77    77  7    7    777 777   77 7   7   7    7
      8   888  8888 8 8888888 88888 888  88   8 88888 8888    8 8 8   8
         9 9 9     9 9   9 9   9  9  99   9   9   9 999 99 9 9     9   9     9
0102
  0  00  00    000  0    0 000  0   0       0  0  0  0  0  0  0  0 000 0  000.
    1  1  1  1 1 1     111   1          1   1    11    11    11     11   11
 2        2  2   2 2   2   2 2    2  2        2    2    2     22 2  2
         3  3 333333  3    33333 333       3    33    33    333    3    3
4
        666  6 6       6  66        6 6   66                 6 6 6  66  666
 7  7   777 777    77777  7        77    7   7 7   7 7   7777  7 77777   7
      8  88 88888    8888   8 888   8   8 88888 8 88888 88888 888 888888  8   8
            9999   99 999      9   9   9     9 9   999   9 9   999   99 9   9
```

COPIE A: TO:

IND. REV.

REV.

SECTION: S.P.S. -

LOC.: PREGNANA (MI)

APPR.

COMPIL. MONDUCCI

EMISS. 9 JUL 71

N.° 4T4720709EA0

Honeywell
Honeywell Information Systems Italia

DIAGNOSTIC PROGRAM - CARD LISTING

4720710Y DSS 157 DISC MONITOR


```
CARD
NUMBER   0         1         2         3         4         5         6         7         8
         123456789 0123456789 0123456789 0123456789 0123456789 0123456789 0123456789 0123456789 0
0103
           0  00   00 0     0   00    0   0 0     0    0  0 0                          00
             1     11    1   1  1   111 1      1  11   1  1
         2     2  2   2   2   2     2 2         2   2   2 2
                  3 3       33    3 3          3   33  3
     4

                6666  66  66  666 66  6      6  66  6   6666
         7  7    77777    77  777     7      7  77  7   7 7
                8  888  88  88   8  8  8 8888 88   8 8888
                   9 9   9 9 9       9 9     999 9 9    9                              99
0104
           0  00   00  0  0  0 0 0  0  0 0   0 0      0     0   00   0    0   0 0  00 00
             1  1 11    11  1 111    111 11 1   1   1  1 11  1 1   1   111 1 1 1    1
         2        2   2 2  2 2   2   2 2 2         2     22            2 2 22 2
                  333   33  3 3 3 33    3 3         33  3 33  3 33  33  3 3 33 3   3
     4

                666       666  666 66  6      6  6   6  66 6   6 6 6     6
         7  7    77 7777 7  7    777  7  7      7  7    7777  7777   7 77  7       7
                8     8888   8 88   8  8  8 8888888 8888 88 8  8888   8 8   8 8888
                   9 9 9 99   99 9     9 9     999       9 9   9       9 9 9     9 9
         123456789 0123456789 0123456789 0123456789 0123456789 0123456789 0123456789 0123456789 0
         0         1         2         3         4         5         6         7         8
```

COPIE A:
TO:
IND. REV.
REV.

SECTION: S.P.S. -	APPR.	COMPIL. MONDUCCI	EMISS. 9 JUL 71	N.° 4T4720709EA0
LOC.: PREGNANA (MI)				

Honeywell
Honeywell Information Systems Italia

DIAGNOSTIC PROGRAM - CARD LISTING

4720710Y DSS 157 DISC MONITOR

CONT. SU FO. 253 FO. 252

```
CARD NUMBER   0         1         2         3         4         5         6         7         8
              123456789 0123456789 0123456789 0123456789 0123456789 0123456789 0123456789 0123456789 0
0105
                0  00   0   0  00      00   0  0    0 0      0  0  0   00 000   0  00    0 0
                  1  1    111 1 1 11  1   111 11  1 111 11  11  1 1   1 1 1 1 111 1 1 11  1 1
              2       2  2       2 2     2 2  2  2   2     2     2  2 2   2   2     2 2
                      33 3 3 33  3 3 33  3 3 33  3 3 3 3   33  3 33  333 333 3 3  3  3
              4

                    66  6  6  6    66     666     6  66           66  66  6  6
              7  7  77 77  777 7   77  7  7 7 7 77  77  7   777   7  7   77  777 7
                  8   888     888  88 888  88 88888   8  8 8 8 8 888   8  88    88 8
                    99 9 9 9 9 9 9 9   9 9 9   9 9 9   9 9   9999  9   9  999   9 999
0106
                0  00     0  0  00  00  00   00  00 00  0 00  0 0 0  0  0 0   0 0 0 0 0 0
                  1  1 1    1  1  1  11  1 1  1 1  1    1  1 111 1  111 11 1  111  1
              2       2 2            2  2    2 2 2  2 2  2 2 2    2 2 2    2 2    2
                      3 33  33  33  33  3  3 33 333  33   3   3 3 33   3 3    3 3
              4

                    666  66 66   6  66   6    6       6 66  6 6 66  6     6  6
              7  7  777  77  7  777 777 7 7  7 777 7777 77   777    7     7  7
                  8 8888  88  8 8 8 888 8 888 8888888888888    8  8    8 8888888 8
                    9    99  9 999  9  9999 9 99 9999 99 99      9 9     99
```

COPIE A: TO:

IND. REV.

REV.

SECTION: S.P.S. -
LOC.: PREGNANA (MI)

APPR.

COMPIL. MONDUCCI

EMISS. 9 JUL 71

N.° 4T4720709EA0

CARD NUMBER

```
0         1         2         3         4         5         6         7         8
123456789 0123456789 0123456789 0123456789 0123456789 0123456789 0123456789 0123456789 0
0107
   0  00  0  0 00    00   0    00  000 00  0 00     0  0 0    0  0 0 0 00  00 0
     1  1   1  11  1 1    1  1 1  1 1 11  1 11    11  1      1    111     1 1
  2       22   22  2 2              2 22  2       2   2 2            2 2   2
          333 333  3  3 333  3 33  333  33   33   33          3      3 33      3
4

         66    66  66        666  66  666 6  6        6666       66  66  66
 7  7    77    77 77          7   7   7 7 777     7   777     777     77  7
       8  888   8 8   8 888 88  8   8  88   888   8888 8      8 8  88   8  8
         99 9 9   9  9   9  99 9   9   9  9999    9  99        99   9      9
0108
   0  00   0  0  0  0       0  00      0    0 0 0 0          00    0 0  00 0
     1  1  1  1 111     11      1 1  1   1  1 111  11 1      11 11     11  1 1
  2              2 2   2   2     2   2 22  2   2 2 2 2          2   2 2
          3  3 3 3 33  3    3  333      3  3 3 3   3 3      3  333     3  3
4                                                                          4

         6   66 6  666    666 66  66  666  6    66  6          66   6
 7  7    7   7     777 77  7 7     77  7 7 7777  7   7          7 777
       8 8 8   888   8 8 8 8 8  88 888 8 8 8 888     8      8  88 8 88    8
             9999 9   9 9          99     9 999   9 9      9 9  9   99 9
```

```
123456789 0123456789 0123456789 0123456789 0123456789 0123456789 0123456789 0123456789 0
0         1         2         3         4         5         6         7         8
```

COPIE A: TO:

IND. REV.

REV.

Honeywell
Honeywell Information Systems Italia

DIAGNOSTIC PROGRAM - CARD LISTING

4720710Y DSS 157 DISC MONITOR

CARD NUMBER

```
0109
0110
```

COPIE A:
TO:
IND. REV.
REV.

SECTION: S.P.S. -
LOC.: PREGNANA (MI)

APPR.
COMPIL. MONDUCCI
EMISS. 9 JUL 71
N.° 4T4720709EA0

Honeywell
Honeywell Information Systems Italia

DIAGNOSTIC PROGRAM - CARD LISTING

4720710Y DSS 157 DISC MONITOR

CONT. SU FO. 256 FO. 255

CARD NUMBER

```
0         1         2         3         4         5         6         7         8
123456789 0123456789 0123456789 0123456789 0123456789 0123456789 0123456789 0123456789 0
0111

  0  00  00 0       0 0       00   0       0   0    0 0 0  00  0000  000  000 0
    1  1 1 11   1   111   1   1 1  1    111  11  11 1 1 11  11    11   11   1
 2          2   2     2   2   2    2  2 2 2   2    2 2 2  22  2222  222  22
            3   3 3 3 3   3 3  33 33    3 3   3  33 333 333333 3 3  3 3  3
4

         6     6     6   6   66    66  6 6         6    6
 7  7    7    777  77   777  7     7   777        7 77 7     7 7 77   77   7   7
      8 888    8 8888    8888  8 88  8 88    8   8   8  8 88 888  8 8  8 8
         999 9 99  9 9 9 9  9 9   9    9 9 9 9    999999999 99 99 9 99   99

0112

  0  00   0  0  000  0 00 0 00 0 00 0 00 0 0  000  0 00   00   00          0 0
    1  1   11 11   11 1  1 1  1 1  1 1  1 1 11   11 1  111  111 111         1
 2         2  2  222  2 22 2 22 2 22 2 22 2 2  222  2 22   22   2   22222
           3  333  333 33 3333 3 3333333 3 3333  33333333333 3  3        333
4

         6     6                6                6                666  66
 7  7    777    77    77 7  7 7  7  7 7 7 77 777  7  7  777 77      77 7 7 7
      8 8    8 88888 8 8  8 8    88 8 8  8 8 88888 8 88 8 88   8  88 8 888    8
         9  9 999 9999999 9999 999999 99 999999 99 9 99 999999  9
```

COPIE A:
TO:
IND. REV.

REV.

SECTION: S.P.S. -
LOC.: PREGNANA (MI)

APPR.

COMPIL. MONDUCCI

EMISS. 9 JUL 71

N.° 4T4720709EA0

Honeywell
Honeywell Information Systems Italia

DIAGNOSTIC PROGRAM - CARD LISTING

4720710Y DSS 157 DISC MONITOR

CONT. SU FO. 257 FO. 256

CARD NUMBER

```
         0         1         2         3         4         5         6         7         8
12345678901234567890123456789012345678901234567890123456789012345678901234567890

0113
   0  00          000                                                       0 0
     1    1       111                                                        1
  2               222
           33      33
4

        66   6   6666
 7  7    77   7  7 77
       8 8 8 8 8 8888
        999  9999  99                                                          9

0114
   0  00     0                            0  0 00     0      00   0  0   0000  0
     1  1 1  1                     1      1     1  1 1   11      1 1  1    1 11
  2         2                      2           2                     2 2   2
          3 3                         3   3  3  33 3 33  3 3  3  33  3   333
4

         6 66                     6  66     6666  6 6   6   66  66   6  6
 7  7    7 777                    7 7 77    777 7 7777  77  7   7 77    77
       8 8 8                      888    88 8 88888 8 8 888 8 8 88 88 8 8 8
         999                      9     9   99999 9999 99 9 9  99 9   9 9

12345678901234567890123456789012345678901234567890123456789012345678901234567890
         0         1         2         3         4         5         6         7         8
```

REV.

COPIE A: TO:

IND. REV.

SECTION: S.P.S. -

LOC.: PREGNANA (MI)

APPR.

COMPIL. MONDUCCI

EMISS. 9 JUL 71

N.° 4T4720709EA0

Honeywell
Honeywell Information Systems Italia

DIAGNOSTIC PROGRAM - CARD LISTING

4720710Y DSS 157 DISC MONITOR

CONT. SU FO. 258 FO. 257

```
CARD
NUMBER
         0         1         2         3         4         5         6         7         8
         123456789 123456789 123456789 123456789 123456789 123456789 123456789 123456789 0
0115
   0  00  0 00      00      00    0      00    0  0  0      0 00  0 00    0
     1  1       11      1   1  1    11   1  1 11    11  1 111  1  1 11  1  111
  2                  2   2   2    2      22    2  2 22       2    2
        3 33  3    3  3 3 33  3 33  3 3 333 3 333   33 3 3    3  3 33  3
4
        6 66  6   6 6 66  66  6 666 6   666 666 6 66666 6 6   6   6  6  66
 7  7   7 7   77  777 7   7   77777 7   7 7 7 777 7 777 7777  77  7  7 77
      8 888 88888 8 8 888 8 8 8 8 8 888 8 8 88888 8 888 88888 8 8 88 88 88
        9 99  9 9 9   9 9 9   9 9   999 9  99 9   999  99 9 9 9  99    999
0116
   0  00  0 0     0  0  0  0 00  0  0   0     0    00  0  0 0  00 00    0 00
     1  1 1 1  1 11    11  1 11  1 1    1  1 111   1 1   1 111   1 1   111 1 11
  2                 2    2 22  2 2             2   2       2 2         2   2
        3 3  3 33   33 33 33333  3   3  3 3 333  33  3    33 33333  3 33
4
        6    6666  666    6 66  666   6  6666       6 6 6 6          66   6
 7  7   7  7 7 7   7 7      77   7   77 7 77   7   7 777     7    7 77   7
      8 88   8 888 8 8 8  8 88  8888 8   8 8 8   8 888  8888   8  8  888  8
        99  99999 99 99 99     999   9 9999999     99 99  9    9999999 9
         123456789 123456789 123456789 123456789 123456789 123456789 123456789 0
         0         1         2         3         4         5         6         7         8
```

COPIE A:
TO:
IND. REV.
REV.

SECTION: S.P.S. -	APPR.	COMPIL. MONDUCCI	EMISS. 9 JUL 71	N.° 4T4720709EA0
LOC.: PREGNANA (MI)				

CARD NUMBER

```
0117

  0  00   0    0 00      00       0    0 0    0  0  0    0 0  0    00   0  0
    1  1     111 1 1  1    1  1  1    11 11   1  1   1    1  1        11   11
 2           2   2     2 2    2        2 2       2                  2 2
        333  3 33 3    3 3    3 3    33   3 3 33  33    3 3 3     3  33     3
4

            6   6  6      6   6   6   6        6   6      6 66   66
 7  7    77 77   77       7          7   7   7   7          7   7 77 77 7
      8    888  8  888  8  888   8 8 8  88 888   888 888 8 888888 8 8888 8
         99999 9 9 999 9 9 999     9 9 9 9     9999  99  9      9  9 99 9

0118

  0  00    0   0    0    0    00       0    0 0 0 0  0    0    0    0 0
    1  1 1   1  11    11  11        11  11    11  11  1  1 11  1 11  1 11  11
 2       2 2   2   2   2 2   2 2   2 2 2   2 2 2 2 2                  2
        33  3 33 3      3 3    33    333  3 3 3 3 3  3  3 33  3 33  3  3
4                                                                        4

         666   6   66    6   666  6    6    6   66     6666  6666  6 66
 7  7    77    7 7 7 7   7 7 7 77 7      7 7    7     7 777 7 777   7777
      8   8  8   8 88  8   8 88 8  8 8  88888    8       8 888 8 8 8 88888
        99  9    9 9  9    9 9  9 9 9         99   9 9  99999999999  9 9  9
```

0	1	2	3	4	5	6	7	8
123456789	0123456789	0123456789	0123456789	0123456789	0123456789	0123456789	0123456789	0

COPIE A: TO: IND. REV. REV.

Honeywell
Honeywell Information Systems Italia

DIAGNOSTIC PROGRAM - CARD LISTING

4720710Y DSS 157 DISC MONITOR

CONT. SU FO. 260 FO. 259

CARD NUMBER

```
0                 1                 2                 3                 4                 5                 6                 7                 8
123456789012345678901234567890123456789012345678901234567890123456789012345678901234567890123456789012345678901234567890
0119

  0  00  0    0     0     0 00   0     0     0 00   0   0     0     0     0
    1  1   1 11  1 11  1 111 1 1 11  1 11  1 111 1 1 1 1 11  1 11  1 11  1  11
 2                          2
        33 3 33  3 33  3 3 3333   3  3 33  3 3 33 3   33 33  3 33  3 33  3
4                                                                                5

          6 6   6 66  6 6       66  6 66  6 6       66  6   6 6   6 66  6 6
 7  7    777777 777 7 7777      777 777 7 7777      77  7   77777 77777 777
      8  8888   8888  888 8   8 88  888   888 8  88 888 8 8 888   888   888
          9999 999999999999    99 999999999999    999  9  99999 9999999999

0120

  0  00  0  0 000  0    00     0  0         0  0   0 00  0  0  00      0000
    1  1 1111 1   11    11    111  1  1 11   1  1 111  1  1 1   1   11    1 11
 2            2 2       2      2  2     2  2  2   2    2         2 2 2 2
        333 33 3  33  3  3  3   3  33 3 3 33 333    3333 3   3 333     3 33
4

                66    66  666    6 6 6    6  66       66    66     6   6
 7  7    77     77  7 77   777    7 7777  77  77    7  77    777    77
      8  8 8   8 8 8 88888 8 88    8 88888   8  8 8   8   888  8 88 8  8 8
         999    9        9  999 9  99 9 9 9   99 9   9  99  99999 9 9 99

123456789012345678901234567890123456789012345678901234567890123456789012345678901234567890123456789012345678901234567890
0                 1                 2                 3                 4                 5                 6                 7                 8
```

COPIE A:
TO:

IND. REV.

REV.

SECTION: S.P.S. -	APPR.	COMPIL. MONDUCCI	EMISS. 9 JUL 71	N.° 4T4720709EA0
LOC.: PREGNANA (MI)				

Honeywell
Honeywell Information Systems Italia

DIAGNOSTIC PROGRAM - CARD LISTING

4720710Y DSS 157 DISC MONITOR

CONT. SU FO. 261 FO. 260

```
CARD NUMBER   0         1         2         3         4         5         6         7         8
              123456789 0123456789 0123456789 0123456789 0123456789 0123456789 0123456789 0123456789 0

0121

                0  00        00   0  0    0   0  0  0  0  0    0  0    0    0  00    00  0
                  1  1   11        1  1       1    11    1  111  1  1 11       1  1  1   11
              2         2 2 2   2   2 2 2   2     2   2 2  2 2  2  2   2 2      2 2
                     33    3 3 333  3  3 3 333 3  33    33    3  3    3  333 333 33  3
            4

                   66    6 6 6   6   6 6 6     6        6     6 6  6   6   6   6
             7  7    7    7   7  7  7 7     7   7777  7     7 7 7            7777 7   7
                 8  8 8   88 8  8 8  88  88  88 8 8 888 8     8 8 888  88  88  88   8
                   9 9 9 9   999   9 9  999 99 9  99 9  999 9 9 99999 9   99  9999999

0122

                0  00   0 0 0  0   00 00    0     0  0     0     0  0 00  0 00     0  0
                  1  1 1  111 1   1 1  1  1 11  1 1 1  1     1     1    11    111   111   11
              2       2 2 2 2   2 2    2 22  2 2                 2    22  2 2 2    2
                     33  3  3 333333333 33333 33333   3     3    333  333  33     3
            4

                   6 6   6 6 6   6   6 66  6 6   6   6 66  6  6   6 6   6 6
             7  7    7 7    7 7        77                    7   77 77 777
                 8      8   88 88  88    88     8 8 8 888   8   8  8 88 8  8 888        8
                   99   9 9  999  99  9999  9999   9     9   9   99  9 99   9   9 9

              123456789 0123456789 0123456789 0123456789 0123456789 0123456789 0123456789 0123456789 0
              0         1         2         3         4         5         6         7         8
```

COPIE A:
TO:
IND.
REV.

REV.

SECTION: S.P.S. -	APPR.	COMPIL. MONDUCCI	EMISS. 9 JUL 71
LOC.: PREGNANA (MI)			N.° 4T4720709EA0

Honeywell
Honeywell Information Systems Italia

DIAGNOSTIC PROGRAM - CARD LISTING

4720710Y DSS 157 DISC MONITOR

CARD NUMBER

```
0123456789012345678901234567890123456789012345678901234567890123456789012345678901234567890
0123

  0  00  0     0 00  0 0 0 00  0 00   0     0     0     0  0    0  0 0 000
    1  1  1  111 11  1 111  1  1   1  11    1    11   111  1  1 11  111    11
 2             2       2 2 2     2          2     2     2       2     2
        33  3  33 3 3  3 3333 3  33   3     3     3     3  3   33  33 3  3
4

         6       6    6          6          6     6           66 6   6   6
 7  7            7    7        77     7          77           77
      8  88  88   8    88  88   888 88888888 888   888      8 8  88  8    8
        9 9 9 9 9  99  99 9  99 9         9   9     9    9 9  9999 9 9 9 9     9

0124

  0  00  0  000  0      0 0   0 0  0    0  0  0   0 0 0  0    0     0 0  0 0  0
    1  1 1  1 1      1  111  1  1 1   11  1  1 111 111  1    1  1  111  1  1
 2             2      2 2 2    2      2    2     2 2      2       2    2
        33 3333  3    3  33 3 33  3   3  3 33   33 3  3 33 3       3  3
4

         6   6 6   6   6   6   6    6     666   6       6 66   6
 7  7       77 7   7   7       7         7  77            7   7
      8  8  8 88 8 8 8  8  888   8 8 888     88 8   8   8 8  88 8   8   8
        99 99999   9 9 9 9   9 9    999   999 999 9 9   9     9 9 9    9

12345678901234567890123456789012345678901234567890123456789012345678901234567890123456789
```

COPIE A: TO:

IND. REV.

REV.

SECTION: S.P.S. -

LOC.: PREGNANA (MI)

APPR.

COMPIL. MONDUCCI

EMISS. 9 JUL 71

N.° 4T4720709EA0

Honeywell
Honeywell Information Systems Italia

DIAGNOSTIC PROGRAM - CARD LISTING

4720710Y DSS 157 DISC MONITOR

CARD NUMBER

```
0125

  0  00      00    0 0  0     0    00    00     0  0      0  0  0 00    000
    1  1   1 11    111  1     1     1    11    11  1  1  11  1    11  1 11 1 1
 2           2   2 2 2 2   2       22  2 2   2     2     2 2    2 2  2 22  2
         333  33 3  3 3333 33  3   3333   3 3   33 3 3 3  3  3 33 33 3  33
4

       6   6   6 6                66  66   6     6   6 6       6   6 66
 7  7  7   7   7 7   7            7  7  7  7        7 7      7 7   7 77
      8 8 8  88 88 88 888 88  8  8 8 88   88  8 888 88888  8 8  88 8  88
          9   9   9         9   9 999   9   9   9   99   9

0126

  0  00     0 00     0    0    00    0    0    0    0   00  0   0 0  0
    1  1 1    1    1    1    11    1    1    1    1   1   1  11   1
 2          2                 22    2    2              2    2  2 2 2  22
         33333333 33333 33  3 33  3 33333 33333 33333 33333 3 3 3 3  33 33
4

       6       6 6   6  6  6 66  6 66  6 66  6 6   6 6     6        6
 7  7  7  777  777   7     77 77 77777 77777 7777  777  77777 77     7
      8 8  8 8 8 8 88888  8 8 8 8 8 8 8 8 8 8 8 8 88888 8 888 8 888 88  8
       9 99   9999  99   9  9  9 9   9 9   9 9   9 99  9      9 9 9 9
```

COPIE A: TO:

IND. REV.

REV.

SECTION: S.P.S. -
LOC.: PREGNANA (MI)

APPR.

COMPIL. MONDUCCI

EMISS. 9 JUL 71

N.° 4T4720709EA0

Honeywell
Honeywell Information Systems Italia

DIAGNOSTIC PROGRAM - CARD LISTING

4720710Y DSS 157 DISC MONITOR

CONT. SU FO. 264 FO. 263

CARD NUMBER

```
0123456789 0123456789 0123456789 0123456789 0123456789 0123456789 0123456789 0123456789 0
0127

  0  00  00  0   00  0  0  00  0 00  0 0  0  00  0   0 0 0 0 0 0 0  0    0 0
    1  1      1  1        1        11         1  1  11 111 111 11    11 1
 2              2  2    222 2 2  2 2 2  2     2 2  2  2  2        2   2
        333 33 3333 33333 333 33333 33 33 3 333 33  3   33 333 33 3 333    3
4

        66  6      6 6  66  6 66     66 66 6        6  6  6
 7  7   77 77  7  7 7 77 7 77777 77  7 7 777 77  7   77     77 7 777
      8 888 8 8 888 88888 88888 8 8 8   88 8 8 888 888   88 8  8 888888
          9 9  9 999            9 9   9   9    9 9 9 9 9   9   9
0128

  0  00  00 0 0 0 0  0   0 0    0 0 0  0     0  0   0 0 0 0 0 0  0  0    0
    1  1 11 111 111  1   111  111 111 11    11 111   11 111 111 11   1 1
 2     2 2 2  2 2            2  2      2    2 2  2  2  2      2  2
        33333 333 33 3 333  33   33  33 3 333 33  33   33 33 33 3  3
4                                                                      4

        6    6  6  6   6   6     6 6     6  6  6 6 6
 7  7   7 7     7 7 7 77  7   77  77 7 7   7  7   77  7 77 7 777
      8 88  8 8  8 888 8 8 8  88 88 888 8 888 888  88 88 8 8 8 8
        9 9 9 9 9 9 9 99 9 9  9 9 9 9 9 999 9 9 9 9  9 9 9 9 9   9
```

COPIE A: TO:

IND. REV.

REV.

SECTION: S.P.S. -

LOC.: PREGNANA (MI)

APPR.

COMPIL. MONDUCCI

EMISS. 9 JUL 71

N.° 4T4720709EA0

Honeywell
Honeywell Information Systems Italia

DIAGNOSTIC PROGRAM - CARD LISTING

4720710Y DSS 157 DISC MONITOR

CARD NUMBER

```
0129

  0  00   0      0   0   0 0   0   00    0 0 0  0     0    0  0   0     0  0
    1  1  1    111   1    11   1     1  11 111 11          11 1    1     1   1
 2       2   2   2     2   2     2     2 2 2 2                2         2     2
       3 33  33 3  3   33 3  3  33333 3 333 33 3 33333 33 3333 333 333 3 3
4
                                                                                5
            6    6   6    6   6     6          6 6   6   6   6   6   6
 7  7        7   7777 77   7777  7       7    77 7 77  7    7  7   7 7   7
      8 8 888 8     8 888     8 88888 88    8 88  888 8 888 8 8 8 8 888 8 8
      9  9 99 9 9       99 9  9         9 9 9 9 9 9999  9 9 9  999  999   9

0130

  0  00      0    0   00   0      0 00   0     0     0    0   00   0      00
    1  1 1   1    11       1     11      1     1     1    11       1     11 1
 2       22 22  2     2   2    2 2         2       2  2     2   2    2 2  2
      3  3 3 3 3  33 3 333 333  33 3 333 3 333 33333 3 3  33 3 333 333  3
4
            6            66  6    6   6    6   6 66            66  6       6
 7  7      7 7 7 77   7  7 7 7 7    7  7   7 77  7 777 7 77   7  7 7 7 7
      8 8  8 8 8 8 8 8 8 8 888 8 8 8 8 8 8 8 8 888 8 8 8 8 8 8 8 8 888 8
      9999 9 99  9 9   999 9 999    999  9999  99999 99  9 9   999 9 999
```

COPIE A: TO:

IND. REV.

REV.

SECTION: S.P.S. -

LOC.: PREGNANA (MI)

APPR.

COMPIL. MONDUCCI

EMISS. 9 JUL 71

N.° 4T4720709EA0

Honeywell
Honeywell Information Systems Italia

DIAGNOSTIC PROGRAM - CARD LISTING

4720710Y DSS 157 DISC MONITOR


```
CARD
NUMBER      0         1         2         3         4         5         6         7         8
            123456789 0123456789 0123456789 0123456789 0123456789 0123456789 0123456789 0123456789 0
0131
            0  00  0 00      0 000 0 0   00  0 0 0 0 0 0 0 0 0 0  0    0 0 0 0 00   0  0
              1  1    1     11   1 111    1    111  11 111 111 11    111 111 1    1   1
          2       2       2 2   2   2       2   2 2 2   2   2       2 2 2 2 2         2
                3 3 3 333  33 3333 3    3 3 33 333 33  333 33 3  333 333 3333 333 3
4

                  6   6     6             6 6       6   6   6     6           6
          7  7      7  7 7    7  77       7 7   77  77      77 7 777  7       7   7   7
              8 888 8 888 8 8 8   8   8 8 8888  88   88 8   8 888888      8 8 8 8 8
                9     9 999     999      99 9 9 9 9 9 9 9 9    9    9 9 9 9  999  9
0132
            0  00  0   0      0 00  0 00    00     0  00  0   0 0  0  0     00  0 0 00
              1  1 1   1     11  1    11    11        1   11   11 1    1     1    111 1
          2       2         2    2 2  2                     2      2 2    2   2  2
                3 3333 3333 33 3 3  33 3 3 3 33333 333 33  33 3333 33  33  3 3 33 3
4

                6 6   6 6   6     6         6 66  66  6   6    6  6   6     6 6
          7  7      77  7 77   7  7  7  77777 7 7 7 7 7 77  77  7 7 77  7    7 7
              8 8888 8 888 8 8 8    88 888 8 88888 8 8 8 8  8   88 8 8   8 8 8888      8
                99 99  99999    9      9  999 9         9   9 9    9     99 9 9
            123456789 0123456789 0123456789 0123456789 0123456789 0123456789 0123456789 0123456789 0
```

COPIE A: TO:

IND. REV.

REV.

SECTION: S.P.S. -

LOC.: PREGNANA (MI)

APPR.

COMPIL. MONDUCCI

EMISS. 9 JUL 71

N.° 4T4720709EA0

Honeywell
Honeywell Information Systems Italia

DIAGNOSTIC PROGRAM - CARD LISTING

4720710Y DSS 157 DISC MONITOR

CARD NUMBER

```
0         1         2         3         4         5         6         7         8
12345678901234567890123456789012345678901234567890123456789012345678901234567890
0133
  0  00    0 0   0 00    0 0  0  0 0  0  00  0     00  0 0   0 00    0 0   0
    1  1    11  11  1    111     111 1        1  1     111  11  1    111  1 1
 2       2 2 2   2 2     2 2 2     2     2     2 2       2   2 2     2 2 2   2
       3 33 33  33 3  333 33 3 3  3333 333 33  3   3 33 33  33 3  333 33
4
                  6        6   66       6  66  6      6  6   6            6
 7  7    7777  77  7  7 777  7 7 77  7 7 777 77  77  7 7   77  7  7 777  7
      8   88  88   88888888 888 88   88 8 8 888   8 8 8   88   88888888 88
         9 9   9    9    9       9 9    9    9         9   9    9    9   9   9
0134
  0  00   0  0  0   0 0 0   0 00     0      0   0   0 0     0  00   0  0  00  0
    1  1 11 1   11     11  11  1    11    111   1    11   111   1  11  1    1
 2       22       2     2   2 2    2       2     2   2 2   2   2   2    2
       3 3333 3   33   33  33 3   3 3  33  3  3   33 33    33 3333 3  3 33  3
4
                              6     6 6     6    6       6    6          6
 7  7    77 7 7 77  77    77  7    777    77  7777  7   7     77  77      77
      8     8  8 8   8   88   8888 8 88888     8 8 8 8 888   888 8 8   8  8
         9 9 9   9     9   9    9  9  9 99 9 9      99     9      99    9
```

COPIE A:
TO:
IND. REV.

REV.

SECTION: S.P.S. -
LOC.: PREGNANA (MI)

APPR.

COMPIL. MONDUCCI

EMISS. 9 JUL 71

N.° 4T4720709EA0

Honeywell
Honeywell Information Systems Italia

DIAGNOSTIC PROGRAM - CARD LISTING

4720710Y DSS 157 DISC MONITOR

CONT. SU FO. 268

CARD NUMBER

```
0         1         2         3         4         5         6         7         8
123456789 0123456789 0123456789 0123456789 0123456789 0123456789 0123456789 0123456789 0
0135
   0  00  0 00    0 0       0 0   0  0    00   0    00  0 00     0     0  0 0
     1  1   11     11       11  11  1    1    1     1  1 11     1     1  1  1 1
  2       2 2      2   2 2   2   2     2 2   22  2       2   2       2   2
        3  333  3  3  3   33 3   3  3 3  33 3 333 333 33 33 3   3 3 3 3 333  3
4
          6 6 6 6   6   6            6 6    6  6     6 6         6
 7  7    77 7 7 777  7777  7          7  7  7 7 7 77  7  7  7     777   777
      8  8 88 8 8     88888     8   8    88 8 8   8 8  8 88888  8   888  88
            9  9 9 9 9    99 9 9    99     99  99   9     99    99 9    99
0136
   0  00  0 0  0   0 0 0      0          0   0      0   00     0      0 0 00
     1  1 1 1  1  11 111 1    1     11  11  11 1    1     1     1     11 111 1
  2       22   2 2 2 2 2            2     2 2 2                 2 2   2   2 2 2   2
        3  3 333  333 333    3 3 3 3 3  33  333    3 3 333 3 3 3 3 3  333 3  3
4
            6                    6    6                6             6   6
 7  7    777  7 77              7777  7   77        7 777   7777  7777  7
      8  8 8   8   8   8     8  88 8   8  8  8     8   8 8 8 8 8 8  88  88
         99    999 9 9   9     9 9 9 9 9 9 9 9   9   9 9  9  9 99  999 9   9
```

COPIE A:
TO:

IND. REV.

REV.

SECTION: S.P.S. -	APPR.	COMPIL. MONDUCCI	EMISS. 9 JUL 71	N.° 4T4720709EA0
LOC.: PREGNANA (MI)				

Honeywell
Honeywell Information Systems Italia

DIAGNOSTIC PROGRAM - CARD LISTING

4720710Y DSS 157 DISC MONITOR


```
CARD
NUMBER     0         1         2         3         4         5         6         7         8
           123456789 0123456789 0123456789 0123456789 0123456789 0123456789 0123456789 0123456789 0
0137
                0  00      0     0 0        0 0 0 0 0 0   0 0 0 0 0 00    0 0       0 0   0 0
                  1  1     1    111 11     11 111 111 111  11 111 11  1 111 11     11  11  1
              2       2     2 2 2 2 2     2   2   2   2   2 2 2       2 2 2 2     2   2
                     3   3 33 3 333       33  333 33  333 333 3333 33 3 333       33  33  33
4
                     6       6             6   6   6   6       6   6 6             6
             7  7    7     77 7  7        77      77  7   7       77 7  7        77  7
                  8    8  8 8   88   8    88 8   8    8    8 8 8  8 8   88   8   88
                     9   99   9 9 9     9 9 9 9 9   9 9 9 9 9 9  99   9 9 9     9   9
0138
                0  00   0 0 0 0  0  0 00  0   00   0  0  00   0    0 0  0  0 00    0 00 0
                  1  1 1 11  11  1    1    1          1       1     11  1  1 1    11  1  1
              2       22 2   2 2     2   2 2         2 2             2       2       2
                     3   333 33 3 33 33 3   3 3 333 3   333 333 333  3  3 3  33 33 3333   3
4                                                                                          4
                     6    6  6   6 66          6                 6       6 6
             7  7    7    7   7   7  77 7   77  777 77  7   777 7777      77 77 77  7  7
                  8   8   88 888    88 8 8   8 888 8 8   8 88  888 8   8    8  888  888
                     99 9 9 9    99       9 9  99    9 9  999999   9   99   999 9 9  9
           123456789 0123456789 0123456789 0123456789 0123456789 0123456789 0123456789 0123456789 0
           0         1         2         3         4         5         6         7         8
```

COPIE A: TO:

IND. REV.

REV.

SECTION: S.P.S. -

LOC.: PREGNANA (MI)

APPR.

COMPIL. MONDUCCI

EMISS. 9 JUL 71

N.° 4T4720709EA0

Honeywell
Honeywell Information Systems Italia

DIAGNOSTIC PROGRAM - CARD LISTING

4720710Y DSS 157 DISC MONITOR

CARD NUMBER

```
0                 1                 2                 3                 4                 5                 6                 7                 8
123456789012345678901234567890123456789012345678901234567890123456789012345678901234567890123456789012345678901234567890123456789012345678901
0139
   0  00  0   0 0  0    0 00    0 0  0      0  0  0 0 0 0 0 00  0 0 0  0    0
     1  1     111      11 11    111  1     11  1  1 111 11  11  1  11  1     1
  2       2   2 2               2 2        2     2 2 2     22  2   2
         3  33  3  3 33 33 3  33  3  3 3333 3  3 3  3 3333 3 333 33 3  3 333  3
4                                                                                                                                                5
         6                     6                    6   6    6
 7  7    7  777    7 77  77 7 777    7 7777      77 7  77  777 7777    7 777
       8  88888      888   888888    8 88888   8    88   8  88   8 8   8 888
         9     9 9 99999 9  9    9 9 999 9 9    99   9 9 9 9   99  9   999 9
0140
   0  00  0  0 00    0 0   0 00  0 0   0   0  0    0 0   0   0  0     0 0 00
     1  1 1 11 11    111  11     111  1   11  1    111  1   11  1     11 111 1
  2       2  2 2     2 2   2       2       2 2     2 2     2 2         2 2 2
         3 3 33 3 3  3 3   3  3 33 33 3    3 33 33 3 3333 3  3  3 3333 333 3  3
4
         6        6 6       6       6      6    6 6   6                      6
 7  7    7 7  7   7  7         77          7   77 7  77  7     7 7777   7
       8  888  88 8  8       8     888   8 888 88 88 8 8 8 8   8 88888 88
         99 9 9  9    9 9 9 9   999   9   9    9   9   9   9   999 9 9 9 9
```

COPIE A:
TO:
IND. REV.

REV.

SECTION: S.P.S. -
LOC.: PREGNANA (MI)

APPR.

COMPIL. MONDUCCI

EMISS. 9 JUL 71

N.° 4T4720709EA0

```
CARD NUMBER   0         1         2         3         4         5         6         7         8
              123456789 0123456789 0123456789 0123456789 0123456789 0123456789 0123456789 0123456789 0

0141

                0  00      0       0   0 00     0   0 0 0  0  0 00       0        0 0        0 0
                  1  1    1     111  11       11  1  111  1    11      11         11         1 1
              2        2        2 2   2       2     2 2 2     2 2   2 2          2   2 2
                     3   33   33 3   3  3 33 33 3 33 3 33 3  333   33 3  33   33 3  3   33    3
4

                     6   6 6         6       6      6    6 6   6     6 6 6     6
              7  7    77      77           77       7  7   7  7   77   777  77   7777  7      7
                   8 8   888 8          8 8   888 888 888 88 88 8 88    88888     88888
                      9     999 9 9 9    99   9 9 9    9         999 9 9    99 9 9    99

0142

                0  00   0        0 0        00    0   0                 00 0 0 0 0 0          0
                  1  1 11         11         1  11  11                 11 1 1 1 111111    11 1
              2       22      2   2     2     2 2   2                22 2
                     3 3  33   33 3  33 33333 3 3   3               3 3   3 3 3    3   333   3
4

                     6  6 6 6     6 6 6     6                   66  6 6     6     6   6 6
              7  7    77 777  77   7777  7                   7      7   7 7        7
                   8 8    88888      8 88888 88    8          88       8 8   8  8 8  8  8   8
                     9 9 99   99 9 9         9 9 9        99 9  9                 999

              123456789 0123456789 0123456789 0123456789 0123456789 0123456789 0123456789 0123456789 0
              0         1         2         3         4         5         6         7         8
```

COPIE A: TO:

IND. REV.

REV.

SECTION: S.P.S. -

LOC.: PREGNANA (MI)

APPR.

COMPIL. MONDUCCI

EMISS. 9 JUL 71

N.° 4T4720709EA0

Honeywell
Honeywell Information Systems Italia

DIAGNOSTIC PROGRAM - CARD LISTING

4720710Y DSS 157 DISC MONITOR


```
CARD
NUMBER
          0         1         2         3         4         5         6         7         8
          123456789 123456789 123456789 123456789 123456789 123456789 123456789 123456789 0
0143
          0  00  0   0       0       0       0       0   0 000 0   0  0  0 0  0 0
            1  1       11       1   1   11  1   1   1   1   1 111 11 11 1 11 1 1
         2       2   2       2                           2   2  2  2 2  2
                 3   33  3   33  3   3   3   3   3  33       3   3  33  33 333  3  3
         4

                 6           6               66          6       6       6
         7  7    77  7   7  7 7     7   7  77       77   7 7 777     7  77   77
               8 88  88  8 888     888   8 88       88     8 88   8   8 8 8
                   9  99             9                9   9 9 999  9   99999   9   9
0144
          0  00  00  0  00 0 0  00 0 0  0  000  00   0  0                        0  0
            1    1 11 11  1 1 11  1 1 11 11   11  111 11                         1
         2     2 22  2  22 2 2  22 2 2  2  222  22   2  2
                 3  3333   3 333  333333  33  33  333333
         4                                                                       4

               6 66     6  6    6       6       6       6
         7  7    77      77  7   7 7 7   7777   7 777   7
               8 88 8 8       8   8 8 8    8888   8 8 8
                 99999    9999   99 99   99 99    9999

          123456789 123456789 123456789 123456789 123456789 123456789 123456789 123456789 0
          0         1         2         3         4         5         6         7         8
```

COPIE A:
TO:
IND.
REV.

REV.

SECTION: S.P.S. -	APPR.	COMPIL. MONDUCCI	EMISS. 9 JUL 71	N.° 4T4720709EA0
LOC.: PREGNANA (MI)				

Honeywell
Honeywell Information Systems Italia

DIAGNOSTIC PROGRAM - CARD LISTING

4720710Y DSS 157 DISC MONITOR

CONT. SU FO. 273 FO. 272

CARD NUMBER

```
         0         1         2         3         4         5         6         7        8
123456789012345678901234567890123456789012345678901234567890123456789012345678901234567890

0145
   0  00                                                                    0
     1                                                                       1 1
  2
         33
4                                                                             4

          6
 7  7   77
       888
        999

0146
   0  00                0     00 00  000  0 0     00  0 0           0     000
     1  1                11111  1  11   11 1 11111  11 1 1111111111  11111   1
  2       2             2     22 22  222  2 2     22  2 2           2     22   2
         3               33333333 333   3333 333333 3333 3333333333  33333
4                                                                             4

                         6           6    66 6        66 6     6     6    66
 7  7    77 7 7 7 7 7 7 7       77  7 77    7      7    7       7 7 7    7
       8 88 8 8 8 8 8 8  8    88 88 8 8  8 8 8    88 8 8 8           8
         9  9 9 9 9 9 9 99     999   9   9 999    9  9 999      99  99   999

12345678901234567890123456789012345678901234567890123456789012345678901234567890
         0         1         2         3         4         5         6         7        8
```

REV.

COPIE A: TO:

IND. REV.

SECTION: S.P.S. -

LOC.: PREGNANA (MI)

APPR.

COMPIL. MONDUCCI

EMISS. 9 JUL 71

N.° 4T4720709EA0

Honeywell
Honeywell Information Systems Italia

DIAGNOSTIC PROGRAM - CARD LISTING

4720710Y DSS 157 DISC MONITOR

CONT. SU FO. 274 FO. 273

CARD NUMBER

```
0147

  0  00   00   000     00 00 0 00  00   0  0 0  00   0 0 0 00  00   000  0 0
    1  1 1  111   11111  1  1 1  11  111 11 1 11  111 1 1 1  11  111   11 1 1
 2       222   222     22 22 2 22  22   2  2 2  22   2 2 2 22  22   222  2
        3   333 3 3 33333 3 3333 33  333 3333 33  333 3 3333 33  333   3333   3
4                                                                            4

           66      66     66  6   6    6   6    666 6  6  6   6     6    66
 7  7    777   777777 7  7   7   7  777  7     77     7  7   7  777 7 77
       8 888 8 88     8 88 8  8888  8      8 88    8      8888  8   8 8  8 8
        99 99    9 99    9999999     9 99 9 9999999 99 99999     9  9   9 9

0148

  0  00  00                                                                0
    1      1                                                                1
 2       22
        3  3
4                                                                           44

          6 6
 7  7    7 7
       8 8  8
        99 99
```

COPIE A: TO:

IND. REV.

REV.

SECTION: S.P.S. -

LOC.: PREGNANA (MI)

APPR.

COMPIL. MONDUCCI

EMISS. 9 JUL 71

N.° 4T4720709EA0

```
CARD NUMBER   0         1         2         3         4         5         6         7         8
              123456789 0123456789 0123456789 0123456789 0123456789 0123456789 0123456789 0123456789 0
0149
                0  00   0  0  0 00  0 0  0  0 00     0  0 0   0   0                          0
                  1      1     1  1 1  1  1  1      1     1     11                           1
              2     2 2     2 2     2 2    2        2  2 2   2   2
                  3   3 3 3 3 33 3  3 3  33        333 3  333 3 3
            4                                                                                4
                                                                                             5
                  6 6     6 6   6 6       6        6  6 6
            7  7  777     7 77  7  7    77         7 7 77  77
                8 88  8 888 8 8  88 8 8 8 8        8 88888 888 8   8
                 99 9  99 9  99       99           9 999 9 9   9
0150
                0  00                                                                        0
                  1                                                                          1
              2       2
                    3 3
            4                                                                                4
                    666                                                                      6
            7  7    7
                8   8 8
                 9   9
              123456789 0123456789 0123456789 0123456789 0123456789 0123456789 0123456789 0123456789 0
              0         1         2         3         4         5         6         7         8
```

COPIE A:
TO:
IND. REV.
REV.

SECTION: S.P.S. -
LOC.: PREGNANA (MI)

APPR.

COMPIL. MONDUCCI

EMISS. 9 JUL 71

N.° 4T4720709EA0

Honeywell
Honeywell Information Systems Italia

DIAGNOSTIC PROGRAM - CARD LISTING

4720710Y DSS 157 DISC MONITOR

CONT. SU FO. 500 FO. 275

CARD NUMBER	0	1	2	3	4	5	6	7	8
	123456789	0123456789	0123456789	0123456789	0123456789	0123456789	0123456789	0123456789	0
9999	287933932691982866706877242845364681148847947710520030587418822292657285884063 07								

CARDS N 150

COPIE A:
TO:

IND.
REV.

REV.

0	1	2	4	6	8
		MONDUCCI	9 JUL 81	4147207009EA0	

SECTION: S.P.S. -
LOC.: PREGNANA (MI)

APPR. AM.

COMPIL.

EMISS.

N.°

E N T R Y T A B L E

ALTPRI	05	02A4	02A9	DEPO	00	035C	035C	JUMP	77	0188	01FF	LETT	9F	02BC	035B	NPRINT	01	02A2	02A3
PRINTO	01	0200	0201	PRINT	9F	0202	02A1	PRNT	73	0100	0173	READER	01	02BA	02BB	START2	03	093A	093D
START	03	0FDC	0FDF	TEMUC	00	02B8	02B8	UDISC1	00	02B9	02B9	YBID7	02	050C		YDECB	02	04AA	
YMUNI	01	0860		YREADB	02	035E		YTYPRA	01	053A		YUNIT	01	0366					

N A M E T A B L E

ALTO	03	02B4	02B7	ALT	01	10F0	10F1	DEP1	00	0C45	0C45	DEPINT	00	0C44	0C44	DS161	18	0C4B	0C63
LF05	05	1168	116D	LF	13	0174	0187	NADISC	2B	0DDA	0E05	NAPRI	01	0FE6	0FE7	NIDISC	1D	0E58	0E75
NODIS1	01	11EA	11EB	NOUNAB	05	1132	1137	NUMERO	02	0DCE	0DD0	OPEE	1C	0CE6	0D02	OPEF	20	0D4A	0D6A
OPEI	1D	0C64	0C81	OPPRI	05	101E	1023	PIU1	00	0C48	0C48	RIDIS	05	10F2	10F7	SECO	01	0E56	0E57
SERV	01	0C49	0C4A	SERVIE	57	0F19	0F70	SERVIF	3E	0F71	0FAF	SERVII	2A	0EB9	0EE3	TITOLO	05	1006	100B
TYPES	07	0EB1	0EB8	UNITA	01	0C46	0C47												

N A M E T A B L E

ADDAAA	03	0770	0773	ADDRAA	02	077C	077E	ADDRES	05	0820	0825	ADIF11	01	08FB	08FC	ADIF	01	08F9	08FA
ALARM1	15	05CA	05DF	ALARM2	14	05E0	05F4	ALARM3	16	05F5	060B	ALARM4	32	060C	063E	ALARM5	31	063F	0670
ALARM6	35	0671	06A6	ALFI	01	07BE	07BF	ALFU	01	07C2	07C3	ALTE	01	08F7	08F8	ALTRIM	09	074D	0756
ATT	01	17DA	17DB	AUTREM	08	0760	0768	AVSEL	01	16DA	16DB	CAER	01	1716	1717	CAPE	01	16A0	16A1
CAPER9	03	15CA	15CD	CAPERC	05	159A	159F	CAPET	07	16E6	16ED	CAT0	03	0A94	0A97	CAT2	05	0A88	0A8D
CAT3	05	0A4E	0A53	CAT4	03	0A7A	0A7D	CAT5	03	0A5E	0A61	CAT6	03	0A6E	0A71	CAT	00	0A98	0A98
CATEP1	05	14D6	14DB	CATEP4	03	14F2	14F5	CATEP9	03	1526	1529	CATEPO	05	14C0	14C5	CATEPS	03	1722	1725
CMP001	00	0F6E	0F6E	CMP002	00	0F6F	0F6F	CMP004	00	0F6D	0F6D	CMP006	00	0F6A	0F6A	CMP008	00	0F6B	0F6B
CMPADD	05	0F62	0F67	CMPDDD	01	0F68	0F69	CMPMAS	01	0F60	0F61	COMP28	00	0F6C	0F6C	COMPE1	05	122A	122F
COMPE2	05	1230	1235	COMPE3	05	1236	123B	COMPE4	05	123C	1241	COMPE5	03	124C	124F	COMPER	05	121A	121F
DEP001	00	077F	077F	DIECIM	01	07D8	07D9	DIF	14	07A6	07BA	DUE40	00	07BB	07BB	DUE	00	08E1	08E1
E000	03	1044	1047	ECO010	03	0F84	0F87	ECO015	03	0F88	0F8B	ECO020	03	0F94	0F97	ECO025	03	0F98	0F98
ECO030	03	0F9C	0F9F	ECO035	05	0FA4	0FA9	ECO040	05	0FB8	0FBD	ECO050	05	0FCE	0FD3	ECO6	05	0FF0	0FF5
ECOECA	01	0F4B	0F4C	ECOECO	4F	0EEA	0F39	ECOIND	01	0F51	0F52	ECOMAS	04	0F5B	0F5F	ECORES	01	0F4F	0F50
ECOS1	01	0F55	0F56	ECOS2	01	0F57	0F58	ECOS3	01	0F59	0F5A	ECOS4	01	0F53	0F54	ECOSZ	10	0F3A	0F4A
EFFE8	00	1699	1699	EGOLT	07	1706	170D	ERCA1	01	16A2	16A3	ERCA2	01	16A4	16A5	ERCAP9	03	1596	1599
ERCAPE	05	1572	1577	ERCAT	07	16EE	16F5	EREAD	04	07C4	07C8	ERREAD	01	091C	091D	ERRRET	1D	178C	17A9
ERW00	05	1082	1087	ERW0	05	1094	1099	ERW1	03	10C2	10C5	ERW2	05	10E0	10E5	ERW5	05	10F0	10F5
ERW6	05	1104	1109	ERW90	03	11EE	11F1	ERW91	01	11F2	11F3	ERW94	05	11FC	1201	ERW996	03	11DE	11E1
ERW999	05	11CC	11D1	ERW99	01	1206	1207	ERWBGN	03	1034	1037	ERWR	03	11F8	11FB	ERWW	01	0F4D	0F4E
ESCOND	05	0F70	0F75	ESSECO	05	0922	0927	EWRITE	04	07C9	07CD	FAULT	20	0862	0882	FIELD	EF	17DC	18CB
HEADER	06	08B1	08B7	HLT	05	120A	120F	IGOL	01	085A	085B	INDI	05	0850	0855	INDIA	02	0856	0858
LBS	00	0769	0769	LENGHT	01	077A	077B	LETTO	00	076F	076F	LUNG	01	07A4	07A5	MARET	07	16F6	16FD
MEMORY	01	076D	076E	MO903	03	0C7E	0C81	MO9903	03	0C66	0C69	MOD6	1F	07E0	07FF	MOD8	1F	0800	081F
MON000	03	0E32	0E35	MON001	03	0AA0	0AA3	MON040	03	0B1E	0B21	MON050	05	0B34	0B39	MON060	05	0AC4	0AC9
MON070	03	0AEE	0AF1	MON080	03	0B86	0B89	MON090	05	0BCC	0BD1	MON190	03	0BFE	0C01	MON200	05	0C16	0C1B
MON400	05	0C54	0C59	MON401	05	08FE	0903	MON545	05	0C32	0C37	MON700	03	113A	113D	MON705	05	1142	1147
MON715	05	1168	116D	MON720	05	1178	117D	MON725	05	117E	1183	MON730	03	119A	119D	MON800	05	11A2	11A7
MON820	05	11AC	11B1	MON825	05	11BC	11C1	MON901	03	0C38	0C3B	MON902	03	0C48	0C4B	MON903	03	0C4C	0C4F
MON904	03	0CA8	0CAB	MON905	03	0CAC	0CAF	MON906	03	0CD4	0CD7	MON907	03	0CDC	0CDF	MON908	05	0CF2	0CF7
MON909	03	0D0C	0D0F	MON910	03	0D1A	0D1D	MON911	03	0D2A	0D2D	MON912	03	0D2E	0D31	MON913	05	0D54	0D59
MON915	03	0D5E	0D61	MON918	03	0D78	0D7B	MON919	03	0DAE	0DB1	MON920	03	0DC0	0DC3	MON921	05	0DE2	0DE7
MON925	03	0DFC	0DFF	MON950	03	0E0A	0E0D	MON955	03	0E12	0E15	MON980	03	0E16	0E19	MON990	03	0E28	0E2B

N A M E T A B L E

MON	03	09DA	09DD	MONIT1	03	09C2	09C5	NOP	0B	1727	1732	OC	05	08CA	0BCF	OPERA	05	0774	0779
OTHERW	08	0757	075F	OTTO	00	07D6	07D6	PARA16	00	1697	1697	PARA20	00	1698	1698	PARAM1	00	1691	1691
PARAM2	00	1692	1692	PARAM3	00	1693	1693	PARAM4	00	1694	1694	PARAM8	00	1695	1695	PARAM9	00	1696	1696
PARAMS	00	1718	1718	PE00T	07	16DE	16E5	PERIPH	03	0FAA	0FAD	POERRO	0C	1764	1770	POHEA1	00	1726	1726
POHEAD	02	16C3	16C5	POHEAR	02	16D5	16D7	POINDI	05	16B4	16B9	POINDR	02	16BA	16BC	POLEGE	05	16BD	16C2
POMARE	01	169E	169F	POSAV	05	16AC	16B1	POSAVA	01	16B2	16B3	POSI	05	07CE	07D3	POSIA	01	07D4	07D5
POSIVE	05	1250	1255	POSIZI	05	16A6	16AB	POSTEP	1C	1733	174F	POTESE	01	169C	169D	POVE00	03	1719	171C
POVE05	00	171D	171D	POVE06	02	171E	1720	POVE10	05	128C	1291	POVE16	05	12A6	12AB	POVE17	05	12EA	12EF
POVE18	01	130C	130D	POVE30	03	13AE	13B1	POVE35	03	13D8	13DB	POVE40	01	13B6	13B7	POVE49	03	129E	12A1
POVE50	03	12B6	12B9	POVE51	03	12BE	12C1	POVE52	03	12C2	12C5	POVE69	05	1346	134B	POVE80	03	137C	137F
POVE95	05	13A4	13A9	POVE98	03	13B2	13B5	QUAT	00	07D7	07D7	R	05	08C4	08C9	READD1	02	16CC	16CE
READDR	05	16C6	16CB	REATE	05	08E8	08ED	REFUS1	05	152A	152F	REFUS2	05	1552	1557	REHO90	03	149E	14A1
REHOM1	03	1438	143B	REHOM2	03	1468	146B	REHOM3	03	140A	140D	REHOME	05	13F0	13F5	RELEGE	05	16CF	16D4
RESET	01	16D8	16D9	RETHOM	01	16DC	16DD	REWARN	1A	1771	178B	RICI	01	1208	1209	RICIC8	03	0918	091B
RICICO	05	090C	0911	RTH	01	07DC	07DD	SECO	01	07BC	07BD	SECTOR	23	0826	0849	SEGET	07	170E	1715
ST	2D	0883	08B0	STAMP6	03	106C	106F	STAMP8	03	0EE2	0EE5	STAMP9	03	0EE6	0EE9	STAMPA	05	0EB8	0EBD
STEPS9	03	1688	168B	STEPS	05	164C	1651	STUMP9	03	148C	14BF	STUMP	05	14A2	14A7	SUBWAT	05	17B0	17B5
SUBWAY	05	17B6	17BB	SW1A	05	15CE	15D3	SW1AND	03	15E2	15E5	SW1B	05	160E	1613	SW1NOR	03	1606	1609
SW1NUR	03	1644	1647	SW1UND	03	161C	161F	SW1V	03	162A	162D	SW1Z	05	15F0	15F5	SW2A	35	06A7	06DC
SW2B	35	06DD	0712	SW2C	39	0713	074C	T00S00	00	1721	1721	TARA01	05	0978	097D	TESE	01	07DE	07DF
TESET	07	16FE	1705	TESTA	23	0780	07A3	TOP001	01	169A	169B	TRASCO	10	08D0	08E0	TREDUE	00	08F6	08F6
TREUNO	01	08F4	08F5	UDISK	00	1293	1293	UNO	01	07DA	07DB	UNOZE	00	0859	0859	V	05	08B8	08BD
VERDA	05	08E2	08E7	VERIFY	05	08EE	08F3	W	05	08BE	08C3	WAIT01	00	17AE	17AE	WAIT1	05	17C4	17C9
WAIT	01	17AA	17AB	WAITZ	03	17D6	17D9	WATT	01	17AC	17AD	WRIHEA	05	084A	084F	ZERO2	02	168E	1690
ZERO	01	168C	168D																

```
0366                    M   00001          STRT   870,4
0100                    M   00002          ORG    256
                            00003          *      PRINT AND JUMP SUBROUTINES

0100                        00005 PRNT     DS     L116
0174                        00006 LF       DS     L20
0188                        00007 JUMP     DS     L120
0200                        00008 PRINTO   DS     L2
0202                        00009 PRINT    DS     L160
02A2                        00010 NPRINT   DS     L2
02A4  D2 01 02B6 00FE       00011 ALTPRI   MVC    ALTO+2(2),254
02AA  43 00 01D6            00012          NOJ    PRINTO-42
02AE  02 80                 00013          LON
02B0  0A 00                 00014          HLT
02B2  02 40                 00015          LOFF
02B4  43 F0 0000            00016 ALTO     JU     0000
02B8  64                    00017 TEMUC    DC     XL1'64'
02B9  FF                    00018 UDISC1   DC     XL1'FF'
02BA  0080                  00019 READER   DC     XL2'0080'
02BC                        00020 LETT     DS     L160
035C                        00021 DEPO     DS     L1
0C44                        00022          RORG
0C44                        00023 DEPINT   DS     L1
0C45                        00024 DEP1     DS     L1
0C46                        00025 UNITA    DS     L2
0C48  01                    00026 PIU1     DC     XL1'01'
0C49  4040                  00027 SERV     DC     CL2'00'
                            00028          ENTRY  PRNT,JUMP,PRINTO,PRINT,ALTPRI,NPRINT,TEMUC
                            00029          ENTRY  UDISC1,START2
                            00030          ENTRY  READER,LET3,DEPO,START
                            00031          ENTRY  LETT
```

```
0C4B  54B2B25041454750          00032 DS161      DC     CL25'DSS 157  DISC  MONITOR
      505459B2535050A4   A6A559B3A6A95050   50

0C64  B25659A351A95550          00033 OPEI       DC     CL30'SFILARE PIASTRA A20 SU GUD 040'
      A75951B2B3A95150   51424050B2B45057   B45450404440

0C82  A7A6A9A95550B3B4          00034            DC     CL37'PORRE TUTTE LE UNITA'' DISCO IN FUORI
      B3B35550A35550B4   A559B351AF505459   B253A65059A55056   B4A6A95950

0CA7  B255A9B559B959A6          00035            DC     CL08'SERVIZIO'
0CAF  A4A6A5B351A95550          00036            DC     CL38'MONTARE UN DISCO SULL''UNITA'' PRESCELTA'
      B4A5505459B253A6   50B2B4A3A3AFB4A5   59B351AF50A7A955   B25355A3B351

0CD5  A7A955A455A95550          00037            DC     CL17'PREMERE ''''START'''''
      AFAFB2B351A9B3AF   AF

0CE6  B351A25550A65656          00038 OPEE       DC     CL29'TAKE OFF BOARD A20 ON GUD 040'
      5052A651A9545051   424050A6A55057B4   5450404440

0D03  B255B350A6565650          00039            DC     CL26'SET OFF ALL THE DISK UNITS'
      51A3A350B3585550   5459B2A250B4A559   B3B2

0D1D  A3A6515450515054          00040            DC     CL30'LOAD A DISC ON THE CHOSEN UNIT'
      59B25350A6A550B3   585550535 8A6B255   A550B4A559B3

0D3B  A7A955B2B250AFAF          00041            DC     CL15'PRESS ''''START'''''
      B2B351A9B3AFAF

0D4A  54555659A355A950          00042 OPEF       DC     CL33'DEFILER LA PLAQUE A20 SUR GUD 040'
      A35150A7A351A8B4   555051424050B2B4   A95057B454504044   40

0D6B                            00043            DC     CL45'PLACER HORS SERVICE TOUTES LES UNITEES '  C
      A7A3515355A95058          00044                   'DISQUE'
      A6A9B250B255A9B5   59535550B3A6B4B3   55B250A355B250B4   A559B35555B25054   59B2A8B455
```

```
0D98  A7A3515355A950B4          00045            DC     CL37'PLACER UN DISQUE SUR L''UNITE'' CHOISIE'
      A5505459B2A8B455   50B2B4A950A3AFB4   A559B355AF505358   A659B25955

0DBD  A7A955B2B255A950          00046            DC     CL17'PRESSER ''''START'''''
      AFAFB2B351A9B3AF   AF

0DCE  41AD50                    00047 NUMERO     DC     CL3'1)'
0DD1  42AD50                    00048            DC     CL3'2)'
0DD4  43AD50                    00049            DC     CL3'3)'
0DD7  44AD50                    00050            DC     CL3'4)'
0DDA                            00051 NADISC     DC     CL44'PORRE IN AUTOMATICO L''UNITA'' '          C
      A7A6A9A9555059A5          00052                   'DISCO PRESCELTA'
      5051B4B3A6A451B3   5953A650A3AFB4A5   59B351AF505459B2   53A650A7A955B253   55A3B351

0E06                            00053            DC     CL37'SET IN AUTOMATIC THE CHOSEN DISC'         C
      B255B35059A55051          00054                   ' UNIT'
      B4B3A6A451B35953   50B358555050358A6   B255A5505459B253   50B4A559B3

0E2B                            00055            DC     CL43'PLACER EN SERVICE L''UNITE'' '            C
      A7A3515355A95055          00056                   'A DISQUE CHOISIE'
      A550B255A9B55953   5550A3AFB4A559B3   55AF505150545 9B2   A8B455505358A659   B25955

0E56  C02E                      00057 SECO       DC     XL2'C02E'
0E58  59A350A5A6A45550          00058 NIDISC     DC     CL30'IL NOME DELL''UNITA'' DISCO  E'' '
      5455A3A3AFB4A559   B351AF505459B253   A6505055AF50

0E76  B3585550A551A455          00059            DC     CL29'THE NAME OF THE DISC UNIT IS '
      50A65650B3585550   5459B25350B4A559   B35059B250

0E93  A35550A5A6A45054          00060            DC     CL30'LE NOM DE L''UNITE'' DISQUE EST '
      5550A3AFB4A559B3   55AF505459B2A8B4   555055B2B350
```

```
0EB1  0000000000000050          00061 TYPES      DC     XL8'50'
0EB9                            00062 SERVII     DC     CL43'CONTROLLARE LE STAMPE, SE CORRETTE '      C
      53A6A5B3A9A6A3A3          00063                   ' PREMERE'
      51A95550A35550B2   B351A4A7555B50B2   555053A6A9A955B3   B3555050A7A955A4   55A955

0EE4                            00064            DC     CL53'''''START'''', PER RICICLARE PREMERE '    C
      AFAFB2B351A9B3AF          00065                   '''''SW.2'''' E ''''START'''''
      AF5B50A755A950A9   59535953A351A955   50A7A955A455A955   50AFAFB2B65B42AF   AF505550AFAFB2B3
      51A9B3AFAF

0F19                            00066 SERVIE     DC     CL88'CHECK THE PRINTINGS, IF CORRECT PRESS'    C
                                00067                   ' ''''START'''', TO RECYCLE PRESS ''''SW.2'''''C
      53585553A250B358          00068                   ' AND ''''START'''''
      5550A7A959A5B359   A557B25B50595650   53A6A9A95553B350   A7A955B2B250AFAF   B2B351A9B3AFAF5B
      50B3A650A95553B8   53A35550A7A955B2   B250AFAFB2B65B42   AFAF5051A55450AF   AFB2B351A9B3AFAF

0F71                            00069 SERVIF     DC     CL63'CONTROLER LES IMPRIMERIES, SI IL SONT'    C
      53A6A5B3A9A6A355          00070                   ' EXACT PRESSER ''''START'''', '
      A950A355B25059A4   A7A959A455A95955   B25B50B2595059A3   50B2A6A5B35055B7   5153B350A7A955B2
      B255A950AFAFB2B3   51A9B3AFAF5B50

0FB0                            00071            DC     CL43'POUR RECYCLER PRESSER ''''SW.2'''' ET '   C
      A7A6B4A950A95553          00072                   '''''START'''''
      B853A355A950A7A9   55B2B255A950AFAF   B2B65B42AFAF5055   B350AFAFB2B351A9   B3AFAF

0FDC  92 FF 02B9        P       00073 START      MVI    X'FF',UDISC1
0FE0  D2 00 02BB 0005           00074            MVC    READER+1(1),0005
                                00075            *      PRINTER   NAME  SEARCH
0FE6  02 80                     00076 NAPRI      LON
0FE8  43 F0 0FEE                00077            JU     **6
0FEC  0A 00                     00078            HLT
                                00079            *UNIT  NPRINT,TEMUC
0FEE  41 F0 0366                                 JRT    YUNIT
```

```
0FF2  02A2
0FF4  02B8
0FF6  43 F0 0FEC
0FFA  02 40

0FFC  41 F0 053A
1000  02A2
1002  0200
1004  02A4
1006  D2 18 021B 0C4B
100C  41 F0 0100
1010  D2 00 0C44 01F8
1016  92 0A 01F8
101A  41 F0 0188

101E  D2 02 020C 0DCE
1024  D2 1D 0210 0C64
102A  41 F0 0100

102E  D2 02 020C 0DD1
1034  D2 2C 0210 0C82
103A  41 F0 0100
103E  D2 02 020C 0DD4
1044  D2 25 0210 0CAF
104A  41 F0 0100
104E  D2 02 020C 0DD7
1054  D2 0E 0210 0CD5
105A  41 F0 0100
105E  41 F0 0188
1062  D2 02 020C 0DCE
1068  D2 1C 0210 0CE6
```

```
                 DC      AL2(NPRINT)
                 DC      AL2(TEMUC)
00080            JU      *-10
00081            LOFF
00082            *       PRINT  SUBROUTINE  GENERATION
00083            *TYPRA  NPRINT,PRINTO,ALTPRI
                 JRT     YTYPRA
                 DC      AL2(NPRINT)
                 DC      AL2(PRINTO)
                 DC      AL2(ALTPRI)
00084 TITOLO     MVC     PRINT+25(25),DS161      TITLE PROGRAM  PRINT
00085            JRT     PRNT
00086            MVC     DEPINT,PRINTO-8
00087            MVI     X'0A',PRINTO-8
00088            JRT     JUMP                    5  LF
00089            *       REQUIRED OPERATIONS PRINT
00090 OPPRI      MVC     PRINT+10(3),NUMERO          1)   IT.
00091            MVC     PRINT+14(30),OPEI
00092            JRT     PRNT
00093            *                                   2)
00094            MVC     PRINT+10(3),NUMERO+3
00095            MVC     PRINT+14(45),OPEI+30
00096            JRT     PRNT
00097            MVC     PRINT+10(3),NUMERO+6        3)
00098            MVC     PRINT+14(38),OPEI+75
00099            JRT     PRNT
00100            MVC     PRINT+10(3),NUMERO+9        4)
00101            MVC     PRINT+14(15),OPEI+113
00102            JRT     PRNT
00103            JRT     JUMP
00104            MVC     PRINT+10(3),NUMERO          1) EN.
00105            MVC     PRINT+14(29),OPEE
```

```
106E  41 F0 0100                00106          JRT   PRNT
1072  D2 02 020C 0DD1          00107          MVC   PRINT+10(3),NUMERO+3        2)
1078  D2 19 0210 0D03          00108          MVC   PRINT+14(26),OPEE+29
107E  41 F0 0100                00109          JRT   PRNT
1082  D2 02 020C 0DD4          00110          MVC   PRINT+10(3),NUMERO+6        3)
1088  D2 1D 0210 0D1D          00111          MVC   PRINT+14(30),OPEE+55
108E  41 F0 0100                00112          JRT   PRNT
1092  D2 02 020C 0DD7          00113          MVC   PRINT+10(3),NUMERO+9        4)
1098  D2 0E 0210 0D3B          00114          MVC   PRINT+14(15),OPEE+85
109E  41 F0 0100                00115          JRT   PRNT
10A2  41 F0 0188                00116          JRT   JUMP
10A6  D2 02 020C 0DCE          00117          MVC   PRINT+10(3),NUMERO          1)  FR.
10AC  D2 20 0210 0D4A          00118          MVC   PRINT+14(33),OPEF
10B2  41 F0 0100                00119          JRT   PRNT
10B6  D2 02 020C 0DD1          00120          MVC   PRINT+10(3),NUMERO+3        2)
10BC  D2 2C 0210 0D6B          00121          MVC   PRINT+14(45),OPEF+33
10C2  41 F0 0100                00122          JRT   PRNT
10C6  D2 02 020C 0DD4          00123          MVC   PRINT+10(3),NUMERO+6        3)
10CC  D2 24 0210 0D98          00124          MVC   PRINT+14(37),OPEF+78
10D2  41 F0 0100                00125          JRT   PRNT
10D6  D2 02 020C 0DD7          00126          MVC   PRINT+10(3),NUMERO+9        4)
10DC  D2 10 0210 0DBD          00127          MVC   PRINT+14(17),OPEF+115
10E2  41 F0 0100                00128          JRT   PRNT
10E6  D2 00 01F8 0C44          00129          MVC   PRINTO-8(1),DEPINT
10EC  41 F0 0188                00130          JRT   JUMP                                  EJECT
10F0  0A 00                     00131 ALT      HLT                HLT. SEE PRINTOUT
                                00132          *                   DISC UNIT  IN OPERATE
10F2  D2 2B 020C 0DDA          00133 RIDIS    MVC   PRINT+10(44),NADISC
10F8  41 F0 0100                00134          JRT   PRNT
10FC  D2 24 020C 0E06          00135          MVC   PRINT+10(37),NADISC+44
1102  41 F0 0100                00136          JRT   PRNT
1106  D2 2A 020C 0E2B          00137          MVC   PRINT+10(43),NADISC+81
110C  41 F0 0100                00138          JRT   PRNT
1110  41 F0 0188                00139          JRT   JUMP                              EJECT
```

```
1114  02 80
1116  41 F0 0366
111A  0C46
111C  02B8
111E  43 F0 11EA
1122  02 40
1124  92 40 0C49
1128  92 40 0C4A
112C  D8 00 0C49 0C47
1132  DA 00 02B9 0C49
1138  D2 01 023E 0C49
113E  D2 1D 021B 0E58
1144  41 F0 0100
1148  D2 01 023E 0C49
114E  D2 1C 021B 0E76
1154  41 F0 0100
1158  D2 01 023E 0C49
115E  D2 1D 021B 0E93
1164  41 F0 0100
1168  D2 00 0C44 01F8
116E  92 0A 01F8
1172  41 F0 0188
1176  D2 33 020C 0EB9
117C  41 F0 0100
1180  D2 29 020C 0EEF
1186  41 F0 0100
118A  41 F0 0188
118E  D2 2E 020C 0F19
1194  41 F0 0100
```

```
00140          *          DISC UNIT NAME SEARCH
00141          LON
00142          *UNIT  UNITA,TEMUC
               JRT    YUNIT
               DC     AL2(UNITA)
               DC     AL2(TEMUC)
00143          JU     NODIS1
00144          LOFF
00145          MVI    X'40',SERV
00146          MVI    X'40',SERV+1
00147          UPK    SERV(1),UNITA+1
00148 NOUNAB   PK     UDISC1(1),SERV
00149          MVC    PRINT+60(2),SERV                UNIT NAME PRINT
00150          MVC    PRINT+25(30),NIDISC
00151          JRT    PRNT
00152          MVC    PRINT+60(2),SERV
00153          MVC    PRINT+25(29),NIDISC+30
00154          JRT    PRNT
00155          MVC    PRINT+60(2),SERV
00156          MVC    PRINT+25(30),NIDISC+59
00157          JRT    PRNT
00158 LF05     MVC    DEPINT(1),PRINTO-8
00159          MVI    X'0A',PRINTO-8
00160          JRT    JUMP                                5LF
00161          *      FINAL PRINT
00162          MVC    PRINT+10(52),SERVII                     IT.
00163          JRT    PRNT
00164          MVC    PRINT+10(42),SERVII+54
00165          JRT    PRNT
00166          JRT    JUMP
00167          MVC    PRINT+10(47),SERVIE                     EN.
00168          JRT    PRNT
```

```
1198  D2 26 020C 0F4A          00169          MVC    PRINT+10(39),SERVIE+49
119E  41 F0 0100               00170          JRT    PRNT
11A2  41 F0 0188               00171          JRT    JUMP
11A6  D2 3C 020C 0F71          00172          MVC    PRINT+10(61),SERVIF                    FR.
11AC  41 F0 0100               00173          JRT    PRNT
11B0  D2 2A 020C 0FB0          00174          MVC    PRINT+10(43),SERVIF+63
11B6  41 F0 0100               00175          JRT    PRNT
11BA  D2 00 01F8 0C44          00176          MVC    PRINTO-8(1),DEPINT
11C0  41 F0 0188               00177          JRT    JUMP
11C4  0A 00                    00178          HLT                           SEE  PRINTOUT
11C6  D2 00 0C44 01F8          00179          MVC    DEPINT(1),PRINTO-8
11CC  92 0A 01F8               00180          MVI    X'0A',PRINTO-8
11D0  53 40 101E               00181          JS2    OPPRI
11D4  D2 00 01F8 0C44          00182          MVC    PRINTO-8(1),DEPINT
11DA  92 F0 02AB               00183          MVI    X'F0',ALTPRI+7
11DE  92 00 001E               00184          MVI    X'00',30
11E2  92 04 001F               00185          MVI    X'04',31
11E6  43 F0 0000               00186          JU     0000
11EA  02 40                    00187 NODIS1   LOFF
                               00188          *MUNI  PRNT,JUMP,PRINT,UNITA+1
11EC  41 F0 0860                              JRT    YMUNI
11F0  0100                                    DC     AL2(PRNT)
11F2  0188                                    DC     AL2(JUMP)
11F4  0202                                    DC     AL2(PRINT)
11F6  0C47                                    DC     AL2(UNITA+1)
11F8  43 F0 1122               00189          JU     NOUNAB-16
00FC                      M    00190          ORG    0252
00FC  43F0                     00191          DC     XL2'43F0'
001E                      M    00192          ORG    30
001E  0FDC                     00193          DC     AL2(START)
0020                           00194          ESGM
```

```
035D                        M       00195            ORG     DEPO+1
05CA  59A5B255A959A955              00196 ALARM1     DC      CL22'INSERIRE SK. PARAMETRO'
      50B2A25B50A751A9   51A455B3A9A6

05E0  59A5B255A9B350A7              00197 ALARM2     DC      CL21'INSERT PARAMETER CARD'
      51A951A455B355A9   505351A954

05F5  59A5B255A955A950              00198 ALARM3     DC      CL23'INSERER CARTE PARAMETRE'
      5351A9B35550A751   A951A455B3A955

060C                                00199 ALARM4     DC      CL51'PORRE IL LETTORE IN ''''OPERATE'''' E '    C
      A7A6A9A9555059A3              00200                    'PREMERE ''''START'''''
      50A355B3B3A6A955   5059A550AFAFA6A7   55A951B355AFAF50   5550A7A955A455A9   5550AFAFB2B351A9
      B3AFAF

063F                                00201 ALARM5     DC      CL50'PUT THE READER IN ''''OPERATE'''',THEN'    C
      A7B4B350B3585550              00202                    ' PRESS ''''START'''''
      A955515455A95059   A550AFAFA6A755A9   51B355AFAFBBB358   55A550A7A955B2B2   50AFAFB2B351A9B3
      AFAF

0671                                00203 ALARM6     DC      CL54'PLACER LE LECTEUR SUR ''''OPERATE''''      C
      A7A3515355A950A3              00204                    ' ET PRESSER ''''START'''''
      5550A35553B355B4   A950B2B4A950AFAF   A6A755A951B355AF   AF5055B350A7A955   B2B255A950AFAFB2
      B351A9B3AFAF

06A7                                00205 SW2A       DC      CL54'PER RICICLARE SULLA PROVA PREMERE '        C
      A755A950A9595359              00206                    '''''SW.2'''' E ''''START'''''
      53A351A95550B2B4   A3A35150A7A9A6B5   5150A7A955A455A9   5550AFAFB2B65B42   AFAF505550AFAFB2
      B351A9B3AFAF

06DD                                00207 SW2B       DC      CL54'TO CYCLE OVER THIS TEST  PRESS '           C
      B3A65053B853A355              00208                    '''''SW.2'''' THEN ''''START'''''
```

```
     50A6B555A950B358  59B250B355B2B350  50A7A955B2B250AF  AFB2B65B42AFAF50  B35855A550AFAFB2
     B351A9B3AFAF

0713                          00209 SW2C      DC     CL58'POUR RECYCLER SUR CET TEST  PRESSER '     C
     A7A6B4A950A95553         00210                  '''''SW.2 ET ''''START'''''
     B853A355A950B2B4  A9505355B350B355  B2B35050A7A955B2  B255A950AFAFB2B6  5B425055B350AFAF
     B2B351A9B3AFAF50  5050

074D 51A3B3A959A455A5         00211 ALTRIM    DC     CL10'ALTRIMENTI'
     B359

0757 A6B35855A9B659B2         00212 OTHERW    DC     CL9'OTHERWISE'
     55

0760 51B4B3A955A455A5         00213 AUTREM    DC     CL9'AUTREMENT'
     B3

0769 02                       00214 LBS       DC     XL1'02'
076A 9F 02BC                  00215           DC     AL3(LETT)
076D                          00216 MEMORY    DS     L2
076F                          00217 LETTO     DS     L1
0770                          00218 ADDAAA    DS     L4
0774                          00219 OPERA     DS     L6
077A                          00220 LENGHT    DS     L2
077C                          00221 ADDRAA    DS     L3
077F                          00222 DEP001    DS     L1
0780                          00223 TESTA     DS     L36
07A4                          00224 LUNG      DS     L2
07A6                          00225 DIF       DS     L21
07BB F0                       00226 DUE40     DC     XL1'F0'
07BC C42E                     00227 SECO      DC     XL2'C42E'
07BE 17DC                     00228 ALFI      DC     AL2(FIELD)
07C0 17DC                     00229           DC     AL2(FIELD)
07C2 222C                     00230 ALFU      DC     AL2(FIELD+2640)
```

```
07C4  72C272C202                  00231 EREAD      DC     XL5'72C272C202'
07C9  32C232C201                  00232 EWRITE     DC     XL5'32C232C201'
07CE  50 4A 0001 07D4             00233 POSI       DP     X'50',X'4A',POSIA(2)
07D4  0100                        00234 POSIA      DC     XL2'0100'
07D6  08                          00235 OTTO       DC     XL1'08'
07D7  04                          00236 QUAT       DC     XL1'04'
07D8  2710                        00237 DIECIM     DC     XL2'2710'
07DA  0001                        00238 UNO        DC     XL2'01'
07DC  8047                        00239 RTH        DC     XL2'8047'
07DE  C012                        00240 TESE       DC     XL2'C012'
07E0                              00241 MOD6       DC     XL32'400F00410D80420C00430A8044090045078046' C
      400F00410D80420C            00242                   '0047048048030049018 00F00'
      00430A8044090045   078046060047048 0   48030049018 00F00

0800                              00243 MOD8       DC     XL32'400B40410A204209004307E04406C04505A046'   C
      400B40410A204209            00244                   '0480470360480240490120 0B40'
      004307E04406C045   05A0460480470360   4802404901200B40

0820  50 46 0002 077C             00245 ADDRES     DP     X'50',X'46',ADDRAA(3)
0826                              00246 SECTOR     DC     XL36'000000000000000000000000100000200000 3'     C
      0000000000000000            00247                   '00000400000500000600000700000800000 9'
      0000000100000200   0003000004000005   0000060000070000   08000009

084A  50 42 0023 0780             00248 WRIHEA     DP     X'50',X'42',TESTA(36)
0850  50 46 0002 0856             00249 INDI       DP     X'50',X'46',INDIA(3)
0856  000000                      00250 INDIA      DC     XL3'000000'
0859  10                          00251 UNOZE      DC     XL1'10'
085A  C022                        00252 IOOL       DC     XL2'C022'
085C  000000000000                00253            DC     XL6'000000000000'
0862  5651B4A3B3B850B3            00254 FAULT      DC     CL33'FAULTY TRACK, TRANSFER BYPASSED  '
      A95153A25B50B3A9   51A5B25655A95052   B8A751B2B2555450   50
```

```
0883                                00255 ST        DC     CL46'CYLINDER  000, HEAD 00, SECTOR 00, '      C
     53B8A359A55455A9               00256                  'VERIFY DATA'
     5050404040BB5058   555154504040BB50   B25553B3A6A95040   40BB50B555A95956   B85054518351

08B1 5855515455A9B2                 00257 HEADER    DC     CL7'HEADERS'
08B8 B555A95956B8                   00258 V         DC     CL6'VERIFY'
08BE B6A959B35550                   00259 W         DC     CL6'WRITE'
08C4 A95551545050                   00260 R         DC     CL6'READ'
08CA 010000010000                   00261 OC        DC     XL6'010000010000'
08D0 4041424344454647               00262 TRASCO    DC     CL17'0123456789ABCDEF '
     4849515253545556   50

08E1 02                             00263 DUE       DC     XL1'02'
08E2 50 4E 0B3F 17DC                00264 VERDA     DP     X'50',X'4E',FIELD(2880)
08E8 10 40 0023 17DC                00265 REATE     DP     X'10',X'40',FIELD(36)
08EE 50 4E 0023 0780                00266 VERIFY    DP     X'50',X'4E',TESTA(36)
08F4 001F                           00267 TREUNO    DC     XL2'001F'
08F6 20                             00268 TREDUE    DC     XL1'20'
08F7 0780                           00269 ALTE      DC     AL2(TESTA)
08F9 07A6                           00270 ADIF      DC     AL2(DIF)
08FB 07BB                           00271 ADIF11    DC     AL2(DIF+21)
08FE D2 01 17AA 17DA  P             00272 MON401    MVC    WAIT,ATT
0904 41 F0 17B6                     00273           JRT    SUBWAY
0908 43 F0 0C44                     00274           JU     MON902-4
090C D2 01 091A 00FE                00275 RICICO    MVC    RICIC8+2(2),254
0912 D2 01 1208 00FE                00276           MVC    RICI(2),254
0918 43 F0 0000                     00277 RICIC8    JU     0000
091C 02 80                          00278 ERREAD    LON
091E 0A 00                          00279           HLT
0920 02 40                          00280           LOFF
0922 D2 00 0929 02BB                00281 ESSECO    MVC    *+7(1),READER+1
0928 9E 00 07BC                     00282           PER    X'00',SECO
092C 43 20 09C2                     00283           JE     MONIT1
0930 02 80                          00284           LON
```

```
0932  0A 00                00285          HLT
0934  02 40                00286          LOFF
0936  43 F0 0922           00287          JU      ESSECO
093A  41 F0 121A           00288 START2   JRT     COMPER
093E  0978                 00289          DC      AL2(TARA01)
0940  0FAB                 00290          DC      AL2(PERIPH+1)
0942  0C45                 00291          DC      AL2(MON902-3)
0944  0C49                 00292          DC      AL2(MON902+1)
0946  0C4D                 00293          DC      AL2(MON903+1)
0948  0CA9                 00294          DC      AL2(MON904+1)
094A  0CDD                 00295          DC      AL2(MON907+1)
094C  0D0D                 00296          DC      AL2(MON909+1)
094E  0D2B                 00297          DC      AL2(MON911+1)
0950  0D2F                 00298          DC      AL2(MON912+1)
0952  0D8D                 00299          DC      AL2(MON919-33)
0954  0DAF                 00300          DC      AL2(MON919+1)
0956  0E0B                 00301          DC      AL2(MON950+1)
0958  0C83                 00302          DC      AL2(MO903+5)
095A  0E13                 00303          DC      AL2(MON955+1)
095C  1293                 00304          DC      AL2(UDISK)
095E  12B7                 00305          DC      AL2(POVE50+1)
0960  12BF                 00306          DC      AL2(POVE51+1)
0962  1403                 00307          DC      AL2(REHOME+19)
0964  1407                 00308          DC      AL2(REHOME+23)
0966  1413                 00309          DC      AL2(REHOME+35)
0968  1439                 00310          DC      AL2(REHOM1+1)
096A  1441                 00311          DC      AL2(REHOM1+9)
096C  129F                 00312          DC      AL2(POVE49+1)
096E  12C3                 00313          DC      AL2(POVE52+1)
0970  1579                 00314          DC      AL2(ERCAPE+7)
0972  1585                 00315          DC      AL2(ERCAPE+19)
0974  1445                 00316          DC      AL2(REHOM1+13)
```

```
0976  144F                    00317            DC      AL2(REHOM1+23)
0978  D2 15 020C 05CA         00318  TARA01    MVC     PRINT+10(22),ALARM1
097E  41 F0 0100              00319            JRT     PRNT
0982  D2 14 020C 05E0         00320            MVC     PRINT+10(21),ALARM2
0988  41 F0 0100              00321            JRT     PRNT
098C  D2 16 020C 05F5         00322            MVC     PRINT+10(23),ALARM3
0992  41 F0 0100              00323            JRT     PRNT
0996  41 F0 0100              00324            JRT     PRNT
099A  D2 32 0202 060C         00325            MVC     PRINT(51),ALARM4
09A0  41 F0 0100              00326            JRT     PRNT
09A4  D2 31 0202 063F         00327            MVC     PRINT(50),ALARM5
09AA  41 F0 0100              00328            JRT     PRNT
09AE  D2 35 0202 0671         00329            MVC     PRINT(54),ALARM6
09B4  41 F0 0100              00330            JRT     PRNT
09B8  41 F0 0188              00331            JRT     JUMP
09BC  0A 00                   00332            HLT
09BE  43 F0 0922              00333            JU      ESSECO
                              00334  MONIT1    *READB  READER+1,LETT,PARAM2
09C2  41 F0 035E                     MONIT1    JRT     YREADB
09C6  02BB                                     DC      AL2(READER+1)
09C8  02BC                                     DC      AL2(LETT)
09CA  1692                                     DC      AL2(PARAM2)
09CC  43 F0 091C              00335            JU      ERREAD
09D0  D2 10 0040 08D0         00336            MVC     0064(17),TRASCO
09D6  92 00 0E0F              00337            MVI     X'00',MON950+5
09DA  95 50 02E3              00338  MON       CMI     X'50',LETT+39
09DE  43 20 0AA0              00339            JE      MON001
09E2  D7 03 1719 1719         00340            XC      POVE00,POVE00
09E8  92 00 1297              00341            MVI     X'00',UDISK+4
09EC  92 00 140B              00342            MVI     X'00',REHOM3+1
09F0  95 50 02DE              00343            CMI     X'50',LETT+34
09F4  43 20 0A00              00344            JE      *+12
09F8  92 F0 1297              00345            MVI     X'F0',UDISK+4
09FC  92 F0 140B              00346            MVI     X'F0',REHOM3+1
```

```
0A00  92 40 00F8                00347          MVI    X'40',248
0A04  D2 02 00F9 02E3           00348          MVC    249(3),LETT+39
                                00349          SUB    YDECB
0A0A  41 F0 04AA                               JRT    YDECB
0A0E  D2 00 0A9B 00EA           00350          MVC    CAT+3(1),234
0A14  95 50 02E8                00351          CMI    X'50',LETT+44
0A18  43 20 0A4E                00352          JE     CAT3
0A1C  92 40 00F8                00353          MVI    X'40',248
0A20  D2 02 00F9 02E8           00354          MVC    249(3),LETT+44
                                00355          SUB    YDECB
0A26  41 F0 04AA                               JRT    YDECB
0A2A  D2 00 0A9A 00EA           00356          MVC    CAT+2(1),234
0A30  D2 01 035A 0A9A           00357          MVC    LETT+158(2),CAT+2
0A36  FF 00 035A 035B           00358          SB     LETT-1(1),LETT(1)
0A3C  43 C0 0A88                00359          JL     CAT2
0A40  92 01 0A98                00360          MVI    X'01',CAT
0A44  D2 00 0A99 035A           00361          MVC    CAT+1(1),LETT+158
0A4A  43 F0 0A94                00362          JU     CAT0
0A4E  D2 00 0A7B 0A9B           00363 CAT3     MVC    CAT4+1(1),CAT+3
0A54  D2 00 0A7C 0A9B           00364          MVC    CAT4+2(1),CAT+3
0A5A  41 F0 13F0                00365          JRT    REHOME
0A5E  53 80 0A6E                00366 CAT5     JS1    CAT6
0A62  92 18 17AA                00367          MVI    X'18',WAIT
0A66  92 00 17AB                00368          MVI    X'00',WAIT+1
0A6A  41 F0 17B6                00369          JRT    SUBWAY
0A6E  95 CA 0A7C                00370 CAT6     CMI    X'CA',CAT4+2
0A72  43 10 0E32                00371          JG     MON000
0A76  41 F0 1250                00372          JRT    POSIVE
0A7A  01000000                  00373 CAT4     DC     XL4'01000000'
0A7E  FE 00 0A7C 0A7B           00374          AB     CAT4-1(1),CAT4-2(1)
0A84  43 F0 0A5E                00375          JU     CAT5
0A88  D7 01 0A98 0A98           00376 CAT2     XC     CAT(2),CAT
```

```
0A8E  FF 00 0A99 035A      00377          SB     CAT+1(1),LETT-1(1)
0A94  41 F0 14C0           00378 CATO     JRT    CATEPO
0A98  00000000             00379 CAT      DC     4XL1'00'
0A9C  43 F0 0E32           00380          JU     MON000
0AA0  95 50 02BC           00381 MON001   CMI    X'50',LETT
0AA4  43 20 0E32           00382          JE     MON000
0AA8  D2 00 11F5 030B      00383          MVC    ERW91+3(1),LETT+79
0AAE  D7 03 0770 0770      00384          XC     ADDAAA(4),ADDAAA
0AB4  92 FF 07A6           00385          MVI    X'FF',DIF
0AB8  D2 13 07A7 07A6      00386          MVC    DIF+1(20),DIF
0ABE  D2 01 0DE4 08F9      00387          MVC    MON921+2(2),ADIF
0AC4  D2 00 0775 02C4      00388 MON060   MVC    OPERA+1(1),LETT+8
0ACA  D2 00 030D 02C3      00389          MVC    LETT+81(1),LETT+7
0AD0  92 50 0774           00390          MVI    X'50',OPERA
0AD4  95 40 02C4           00391          CMI    X'40',LETT+8
0AD8  43 D0 0AEE           00392          JNE    MON070
0ADC  92 F0 0CD5           00393          MVI    X'F0',MON906+1
0AE0  D2 04 0E2C 07C4      00394          MVC    MON990+4(5),EREAD
0AE6  92 10 0774           00395          MVI    X'10',OPERA
0AEA  43 F0 0B1E           00396          JU     MON040
0AEE  92 00 0CD5           00397 MON070   MVI    X'00',MON906+1
0AF2  92 00 0CD9           00398          MVI    X'00',MON907-3
0AF6  92 F0 0CEF           00399          MVI    X'F0',MON908-3
0AFA  D2 04 0E2C 07C9      00400          MVC    MON990+4(5),EWRITE
0B00  95 42 02C4           00401          CMI    X'42',LETT+8
0B04  43 20 0B1E           00402          JE     MON040
0B08  92 F0 0CD9           00403          MVI    X'F0',MON907-3
0B0C  D2 04 0E2C 07C4      00404          MVC    MON990+4(5),EREAD
0B12  43 C0 0B1A           00405          JL     *+8
0B16  92 03 0E30           00406          MVI    X'03',MON990+8
0B1A  92 F0 0D1B           00407          MVI    X'F0',MON910+1
0B1E  95 4F 02CA           00408 MON040   CMI    X'4F',LETT+14
0B22  92 F0 0C8B           00409          MVI    X'F0',MO903+13
0B26  43 D0 0B86           00410          JNE    MON080
```

```
0B2A  92 00 0C8B                00411          MVI    X'00',MO903+13
0B2E  D2 03 0B36 07BE           00412          MVC    MON050+2(4),ALFI
0B34  D7 EF 0000 0000           00413 MON050   XC     0000(240),0000
0B3A  FE 10 0B39 07BB           00414          AB     MON050(2),DUE40(1)
0B40  FE 10 0B37 07BB           00415          AB     MON050-2(2),DUE40(1)
0B46  D5 01 0B36 07C2           00416          CMC    MON050+2(2),ALFU
0B4C  43 E0 0B34                00417          JLE    MON050
0B50  92 00 0CEF                00418          MVI    X'00',MON908-3
0B54  92 00 0D1B                00419          MVI    X'00',MON910+1
0B58  92 00 0CD5                00420          MVI    X'00',MON906+1
0B5C  92 4E 0775                00421          MVI    X'4E',OPERA+1
0B60  D2 01 0776 0801           00422          MVC    OPERA+2(2),MOD8+1
0B66  FF 10 0777 07DB           00423          SB     OPERA-2(2),UNO(1)
0B6C  92 00 0CD9                00424          MVI    X'00',MON907-3
0B70  D2 01 0778 07BE           00425          MVC    OPERA+4(2),ALFI
0B76  92 FF 07A6                00426          MVI    X'FF',DIF
0B7A  D2 09 07A7 07A6           00427          MVC    DIF+1(10),DIF
0B80  D2 01 0DE4 08F9           00428          MVC    MON921+2(2),ADIF
0B86  92 40 00F8                00429 MON080   MVI    X'40',248
0B8A  D2 02 00F9 02BE           00430          MVC    249(3),LETT+2
                                00431          SUB    YDECB
0B90  41 F0 04AA                               JRT    YDECB
0B94  D2 00 0771 00EA           00432          MVC    ADDAAA+1(1),234
0B9A  D2 00 07D5 00EA           00433          MVC    POSIA+1(1),234
0BA0  D2 01 0772 02C1           00434          MVC    ADDAAA+2(2),LETT+5
0BA6  DA 00 0772 0772           00435          PK     ADDAAA+2(1),ADDAAA+2
0BAC  FE 00 0772 0772           00436          AB     ADDAAA-1(1),ADDAAA-1(1)
0BB2  FE 00 0772 0772           00437          AB     ADDAAA-1(1),ADDAAA-1(1)
0BB8  FE 00 0772 0772           00438          AB     ADDAAA-1(1),ADDAAA-1(1)
0BBE  95 40 02BC                00439          CMI    X'40',LETT
0BC2  43 20 0BCC                00440          JE     MON090
0BC6  FE 00 0770 07D6           00441          AB     ADDAAA-3(1),OTTO
```

```
0BCC  FE 00 0770 07D7          00442 MON090    AB     ADDAAA-3(1),QUAT(1)
0BD2  95 41 02BD               00443           CMI    X'41',LETT+1
0BD6  92 00 0CAD               00444           MVI    X'00',MON905+1
0BDA  43 20 0C38               00445           JE     MON901
0BDE  92 F0 0CAD               00446           MVI    X'F0',MON905+1
0BE2  FF 00 0770 07D7          00447           SB     ADDAAA-3(1),QUAT(1)
0BE8  D2 03 00F8 02C6          00448           MVC    248(4),LETT+10
                               00449           SUB    YDECB
0BEE  41 F0 04AA                               JRT    YDECB
0BF2  D2 01 076D 00E9          00450           MVC    MEMORY(2),233
0BF8  D2 00 076F 02C5          00451           MVC    LETTO(1),LETT+9
0BFE  95 40 076F               00452 MON190    CMI    X'40',LETTO
0C02  43 20 0C16               00453           JE     MON200
0C06  FE 11 076E 07D9          00454           AB     MEMORY(2),DIECIM(2)
0C0C  FB 01 076F 07DB          00455           SD     LETTO,UNO
0C12  43 F0 0BFE               00456           JU     MON190
0C16  D2 03 00F8 02CA          00457 MON200    MVC    248(4),LETT+14
                               00458           SUB    YDECB
0C1C  41 F0 04AA                               JRT    YDECB
0C20  D2 01 077A 00E9          00459           MVC    LENGHT(2),233
0C26  D2 01 0778 076D          00460           MVC    OPERA+4(2),MEMORY
0C2C  D2 01 0776 077A          00461           MVC    OPERA+2(2),LENGHT
0C32  FF 10 0777 07DB          00462 MON545    SB     OPERA-2(2),UNO(1)
0C38  95 4F 02CA               00463 MON901    CMI    X'4F',LETT+14
0C3C  43 20 0C44               00464           JE     *+8
0C40  53 40 0C54               00465           JS2    MON400
0C44  9E 00 07DC               00466           PER    X'00',RTH
0C48  9E 00 07CE               00467 MON902    PER    X'00',POSI
0C4C  9E 00 07DE               00468 MON903    PER    X'00',TESE
0C50  43 10 08FE               00469           JG     MON401
0C54  D2 02 077C 0770          00470 MON400    MVC    ADDRAA(3),ADDAAA
0C5A  FE 22 077E 077E          00471           AB     ADDRAA(3),ADDRAA(3)
0C60  FA 00 077E 02C3          00472           AD     ADDRAA(1),LETT-152(1)
0C66  92 00 077F               00473 MO9903    MVI    X'00',DEP001
```

```
0C6A  92 00 0CEB                 00474          MVI    X'00',MON908-7
0C6E  92 00 1035                 00475          MVI    X'00',ERWBGN+1
0C72  92 00 1213                 00476          MVI    X'00',HLT+9
0C76  92 FF 0F4D                 00477          MVI    X'FF',ERWW
0C7A  92 FF 0F4E                 00478          MVI    X'FF',ERWW+1
0C7E  41 F0 090C                 00479 MO903    JRT    RICICO
0C82  9E 00 16D8                 00480          PER    X'00',RESET
0C86  53 80 0CA8                 00481          JS1    MON904
0C8A  43 00 0CA8                 00482          NOJ    MON904
0C8E  FE 00 077F 07DB            00483          AB     DEP001(1),UNO(1)
0C94  92 F0 1035                 00484          MVI    X'F0',ERWBGN+1
0C98  95 06 077F                 00485          CMI    X'06',DEP001
0C9C  43 C0 0CA8                 00486          JL     MON904
0CA0  92 F0 1213                 00487          MVI    X'F0',HLT+9
0CA4  92 00 1035                 00488          MVI    X'00',ERWBGN+1
0CA8  9E 00 0820                 00489 MON904   PER    X'00',ADDRES
0CAC  43 00 0E0A                 00490 MON905   NOJ    MON950
0CB0  D2 02 0780 0770            00491          MVC    TESTA(3),ADDAAA
0CB6  D2 02 0783 0770            00492          MVC    TESTA+3(3),ADDAAA
0CBC  D2 02 0786 077C            00493          MVC    TESTA+6(3),ADDRAA
0CC2  D2 1A 0789 0786            00494          MVC    TESTA+9(27),TESTA+6
0CC8  FE EE 07A3 0849            00495          AB     TESTA(15),SECTOR(15)
0CCE  FE EE 0794 083A            00496          AB     TESTA-15(15),SECTOR-15(15)
0CD4  43 00 0DAE                 00497 MON906   NOJ    MON919
0CD8  43 00 0CFC                 00498          NOJ    MON909-16
0CDC  9E 00 084A                 00499 MON907   PER    X'00',WRIHEA
0CE0  41 F0 0F70                 00500          JRT    ESCOND
0CE4  02820282010F               00501          DC     XL6'02820282010F'
0CEA  43 00 0DFC                 00502          NOJ    MON925
0CEE  43 00 0E32                 00503          NOJ    MON000
0CF2  D2 03 0CF8 0CA8            00504 MON908   MVC    MON908+6(4),MON904
0CF8                             00505          DS     L4
```

```
0CFC  D9 14 07A6 0772
0D02  D5 01 00FE 08FB
0D08  43 D0 0D3C
0D0C  9E 00 08EE
0D10  41 F0 0F70
0D14  42824282030F
0D1A  43 00 0E32
0D1E  D2 02 0856 077C
0D24  FF 00 0856 07D6
0D2A  9E 00 0850
0D2E  9E 00 0774
0D32  41 F0 0F70
0D36  32C232C20100
0D3C  95 90 077E
0D40  43 D0 0D54
0D44  95 C8 0772
0D48  43 30 0D5E
0D4C  92 80 0772
0D50  43 F0 0D5A
0D54  FE 00 0772 07D6
0D5A  43 F0 0C54
0D5E  43 00 0D78
0D62  D2 00 07D5 0771
0D68  92 00 0772
0D6C  92 F0 0CD9
0D70  92 F0 0D5F
0D74  43 F0 0C44
0D78  95 CA 0771
0D7C  43 20 0E32
0D80  92 00 0D5F
0D84  92 00 0CD9
0D88  92 01 07D5
0D8C  9E 00 07CE
0D90  FE 00 0771 07DB
```

```
00506            SR      DIF(21),ADDAAA+2
00507            CMC     254(2),ADIF11
00508            JNE     MON912+14
00509 MON909     PER     X'00',VERIFY
00510            JRT     ESCOND
00511            DC      XL6'42824282030F'
00512 MON910     NOJ     MON000
00513            MVC     INDIA(3),ADDRAA
00514            SB      INDIA-2(1),OTTO
00515 MON911     PER     X'00',INDI
00516 MON912     PER     X'00',OPERA
00517            JRT     ESCOND
00518            DC      XL6'32C232C20100'
00519            CMI     X'90',ADDRAA+2
00520            JNE     MON913
00521            CMI     X'C8',ADDAAA+2
00522            JGE     MON915
00523            MVI     X'80',ADDAAA+2
00524            JU      *+10
00525 MON913     AB      ADDAAA-1(1),OTTO(1)
00526            JU      MON400
00527 MON915     NOJ     MON918
00528            MVC     POSIA+1(1),ADDAAA+1
00529            MVI     X'00',ADDAAA+2
00530            MVI     X'F0',MON907-3
00531            MVI     X'F0',MON915+1
00532            JU      MON902-4
00533 MON918     CMI     X'CA',ADDAAA+1
00534            JE      MON000
00535            MVI     X'00',MON915+1
00536            MVI     X'00',MON907-3
00537            MVI     X'01',POSIA+1
00538            PER     X'00',POSI
00539            AB      ADDAAA-2(1),UNO(1)
```

```
0D96  92 00 0772                 00540            MVI    X'00',ADDAAA+2
0D9A  92 FF 07A6                 00541            MVI    X'FF',DIF
0D9E  D2 13 07A7 07A6            00542            MVC    DIF+1(20),DIF
0DA4  D2 01 0DE4 08F9            00543            MVC    MON921+2(2),ADIF
0DAA  43 F0 0C54                 00544            JU     MON400
0DAE  9E 00 08E8                 00545 MON919     PER    X'00',REATE
0DB2  41 F0 0F70                 00546            JRT    ESCOND
0DB6  4282428202FF               00547            DC     XL6'4282428202FF'
0DBC  43 F0 0E32                 00548            JU     MON000
0DC0  53 80 11FC                 00549 MON920     JS1    ERW94
0DC4  FE 00 077C 08E1            00550            AB     ADDRAA-2(1),DUE(1)
0DCA  92 00 1213                 00551            MVI    X'00',HLT+9
0DCE  D2 00 035B 0CD9            00552            MVC    LETT+159(1),MON907-3
0DD4  92 00 0CD9                 00553            MVI    X'00',MON907-3
0DD8  92 F0 0CEB                 00554            MVI    X'F0',MON908-7
0DDC  FE 10 0DE5 07DB            00555            AB     MON921-2(2),UNO(1)
0DE2  D2 00 0000 0772            00556 MON921     MVC    0000(1),ADDAAA+2
0DE8  D2 03 0DEE 0CA8            00557            MVC    *+6(4),MON904
0DEE  00000000                   00558            DC     4XL1'00'
0DF2  D6 05 0780 08CA            00559            OC     TESTA(6),OC
0DF8  43 F0 0CBC                 00560            JU     MON905+16
0DFC  92 00 0CEB                 00561 MON925     MVI    X'00',MON908-7
0E00  D2 00 0CD9 035B            00562            MVC    MON907-3(1),LETT+159
0E06  43 F0 0D3C                 00563            JU     MON912+14
0E0A  9E 00 0774                 00564 MON950     PER    X'00',OPERA
0E0E  43 00 0E28                 00565            NOJ    MON990
0E12  9E 00 085A                 00566 MON955     PER    X'00',IGOL
0E16  92 F0 0E0F                 00567 MON980     MVI    X'F0',MON950+5
0E1A  43 20 0E28                 00568            JE     MON990
0E1E  FE 00 077C 07D7            00569            AB     ADDRAA-2(1),QUAT
0E24  43 F0 0CA8                 00570            JU     MON904
0E28  41 F0 0F70                 00571 MON990     JRT    ESCOND
```

```
0E2C  000000000000          00572          DC     XL6'000000000000'
0E32  53 40 09DA            00573 MON000   JS2    MON
0E36  D2 35 020C 06A7       00574          MVC    PRINT+10(54),SW2A
0E3C  41 F0 0100            00575          JRT    PRNT
0E40  D2 09 020C 074D       00576          MVC    PRINT+10(10),ALTRIM
0E46  D2 15 0217 05CA       00577          MVC    PRINT+21(22),ALARM1
0E4C  41 F0 0100            00578          JRT    PRNT
0E50  D2 32 020C 060C       00579          MVC    PRINT+10(51),ALARM4
0E56  41 F0 0100            00580          JRT    PRNT
0E5A  41 F0 0100            00581          JRT    PRNT
0E5E  D2 35 020C 06DD       00582          MVC    PRINT+10(54),SW2B
0E64  41 F0 0100            00583          JRT    PRNT
0E68  D2 08 020C 0757       00584          MVC    PRINT+10(9),OTHERW
0E6E  D2 14 0216 05E0       00585          MVC    PRINT+20(21),ALARM2
0E74  41 F0 0100            00586          JRT    PRNT
0E78  D2 31 020C 063F       00587          MVC    PRINT+10(50),ALARM5
0E7E  41 F0 0100            00588          JRT    PRNT
0E82  41 F0 0100            00589          JRT    PRNT
0E86  D2 39 020C 0713       00590          MVC    PRINT+10(58),SW2C
0E8C  41 F0 0100            00591          JRT    PRNT
0E90  D2 08 020C 0760       00592          MVC    PRINT+10(9),AUTREM
0E96  D2 16 0216 05F5       00593          MVC    PRINT+20(23),ALARM3
0E9C  41 F0 0100            00594          JRT    PRNT
0EA0  D2 35 020C 0671       00595          MVC    PRINT+10(54),ALARM6
0EA6  41 F0 0100            00596          JRT    PRNT
0EAA  41 F0 0188            00597          JRT    JUMP
0EAE  0A 00                 00598          HLT
0EB0  53 40 09DA            00599          JS2    MON
0EB4  43 F0 0922            00600          JU     ESSECO
```

```
0EB8  D2 01 0EE8 00FE          00602 STAMPA     MVC    STAMP9+2(2),254
0EBE  D2 21 020C 0883          00603            MVC    PRINT+10(34),ST
                               00604            *BID7  ADDAAA+1,PRINT+20,UNO
0EC4  41 F0 050C                                JRT    YBID7
0EC8  0771                                      DC     AL2(ADDAAA+1)
0ECA  0216                                      DC     AL2(PRINT+20)
0ECC  07DA                                      DC     AL2(UNO)
                               00605            *BID7  ADDAAA+2,PRINT+29,DUE
0ECE  41 F0 050C                                JRT    YBID7
0ED2  0772                                      DC     AL2(ADDAAA+2)
0ED4  021F                                      DC     AL2(PRINT+29)
0ED6  08E1                                      DC     AL2(DUE)
0ED8  92 50 021F               00606            MVI    X'50',PRINT+29
0EDC  F8 00 022C 077E          00607            MVQ    PRINT-117(1),ADDRAA(1)
0EE2  41 F0 0100               00608 STAMP8     JRT    PRNT
0EE6  43 F0 0000               00609 STAMP9     JU     0000
                               00610            *      ESCOND SUBROUTINE
0EEA                           00611 ECOECO     DC     CL80'FINETERCATSECOTNU30TNU20TNU10TIGOLTCAPET' C
      5659A555B355A953         00612                   'MATETMARETTESETMAPETEGOLTFISETSEGETPE00T'
      51B3B25553A6B3A5   B44340B3A5B44240   B3A5B44140B35957   A6A3B35351A755B3   A451B355B3A451A9
      55B3B355B255B3A4   51A755B35557A6A3   B35659B255B3B255   5755B3A7554040B3

0F3A  C040422E2C2A2422         00613 ECOSZ      DC     XL17'C040422E2C2A24221E1A1412100B050301'
      1E1A1412100B0503   01

0F4B  0EEA                     00614 ECOECA     DC     AL2(ECOECO)
0F4D  FFFF                     00615 ERWW       DC     XL2'FFFF'
0F4F                           00616 ECORES     DS     L2
0F51  0F3C                     00617 ECOIND     DC     AL2(ECOSZ+2)
0F53  C400                     00618 ECOS4      DC     XL2'C400'
0F55  0000                     00619 ECOS1      DC     XL2'0000'
0F57  0000                     00620 ECOS2      DC     XL2'0000'
```

```
0F59  0000
0F5B  0000000000
0F60  0000
0F62  000000000000
0F68  0F62
0F6A  06
0F6B  08
0F6C  1C
0F6D  04
0F6E  01
0F6F  02
0F70  D2 00 0F9D 0FAB
0F76  D7 12 0F55 0F55
0F7C  92 01 0F56
0F80  43 10 0F88
0F84  92 01 0F5A
0F88  95 46 02B8
0F8C  43 20 0F94
0F90  92 F0 0F99
0F94  92 02 0F56
0F98  43 00 0FA4
0F9C  9E 00 0F3A
0FA0  43 10 0FB8
0FA4  D2 00 0F54 0F3C
0FAA  9E 00 0F53
0FAE  43 10 0FB8
0FB2  FE 11 0F5A 0F56
0FB8  FE 10 0FA9 0F6E
0FBE  FE 11 0F56 0F56
0FC4  43 C0 0FA4
0FC8  D2 01 0FD2 00FE
0FCE  D2 05 0F5B 0000
0FD4  D4 01 0F59 0F5B
0FDA  D2 01 0FA8 0F51
```

```
00621 ECOS3     DC    XL2'0000'
00622 ECOMAS    DC    XL5'0000000000'
00623 CMPMAS    DC    XL2'0000'
00624 CMPADD    DC    XL6'000000000000'
00625 CMPDDD    DC    AL2(CMPADD)
00626 CMP006    DC    XL1'06'
00627 CMP008    DC    XL1'08'
00628 COMP28    DC    XL1'1C'
00629 CMP004    DC    XL1'04'
00630 CMP001    DC    XL1'01'
00631 CMP002    DC    XL1'02'
00632 ESCOND    MVC   ECO030+1(1),PERIPH+1
00633           XC    ECOS1(19),ECOS1
00634           MVI   X'01',ECOS1+1
00635           JG    ECO015
00636 ECO010    MVI   X'01',ECOS3+1
00637 ECO015    CMI   X'46',TEMUC
00638           JE    ECO020
00639           MVI   X'F0',ECO025+1
00640 ECO020    MVI   X'02',ECOS1+1
00641 ECO025    NOJ   ECO035
00642 ECO030    PER   X'00',ECOSZ
00643           JG    ECO040
00644 ECO035    MVC   ECOS4+1(1),ECOSZ+2
00645 PERIPH    PER   X'00',ECOS4
00646           JG    ECO040
00647           AB    ECOS3(2),ECOS1(2)
00648 ECO040    AB    ECO035(2),CMP001(1)
00649           AB    ECOS1,ECOS1
00650           JL    ECO035
00651           MVC   ECO050+4(2),254
00652 ECO050    MVC   ECOMAS(6),0000
00653           NC    ECOS3(2),ECOMAS
00654           MVC   ECO035+4(2),ECOIND
```

```
0FE0  D2 01 11FA 00FE
0FE6  FE 10 11FB 0F6A
0FEC  92 00 030C
0FF0  D5 01 0F59 0F5D
0FF6  43 D0 1034
0FFA  02 40
0FFC  92 FF 030C
1000  95 4F 02CA
1004  43 D0 1024
1008  92 F0 11D3
100C  95 01 0F5F
1010  43 D0 11EE
1014  95 01 077F
1018  43 D0 11EE
101C  95 40 030B
1020  43 20 11A2
1024  95 40 030B
1028  43 20 1048
102C  92 00 030C
1030  43 F0 11EE
1034  43 00 1206
1038  D2 00 11F5 030B
103E  92 50 030B
1042  02 80
1044  53 80 1206
1048  D2 0A 022F 08A6
104E  95 02 0F5F
1052  D2 05 022F 08B8
1058  43 10 106C
105C  D2 05 022F 08C4
1062  43 20 106C
1066  D2 05 022F 08BE
```

```
00655            MVC    ERWR+2(2),254
00656            AB     ERWR(2),CMP006(1)
00657            MVI    X'00',LETT+80
00658 EC06       CMC    ECOS3,ECOMAS+2
00659            JNE    ERWBGN
00660            LOFF
00661            MVI    X'FF',LETT+80
00662            CMI    X'4F',LETT+14
00663            JNE    *+32
00664            MVI    X'F0',ERW999+7
00665            CMI    X'01',ECOMAS+4
00666            JNE    ERW90
00667            CMI    X'01',DEP001
00668            JNE    ERW90
00669            CMI    X'40',LETT+79
00670            JE     MON800
00671            CMI    X'40',LETT+79
00672            JE     E000+4
00673            MVI    X'00',LETT+80
00674            JU     ERW90
00675 ERWBGN     NOJ    ERW99
00676            MVC    ERW91+3(1),LETT+79
00677            MVI    X'50',LETT+79
00678            LON
00679 E000       JS1    ERW99
00680            MVC    PRINT+45(11),ST+35
00681            CMI    X'02',ECOMAS+4
00682            MVC    PRINT+45(6),V
00683            JG     STAMP6
00684            MVC    PRINT+45(6),R
00685            JE     STAMP6
00686            MVC    PRINT+45(6),W
```

```
106C  95 00 0F60                00687 STAMP6   CMI   X'00',ECOMAS+5
1070  43 20 107A                00688          JE    *+10
1074  D2 06 0236 08B1           00689          MVC   PRINT+52(7),HEADER
107A  41 F0 0EB8                00690          JRT   STAMPA
107E  41 F0 0100                00691          JRT   PRNT
1082  D4 01 0F5D 0F5B           00692 ERW00    NC    ECOMAS+2(2),ECOMAS
1088  D7 01 0F5D 0F59           00693          XC    ECOMAS+2(2),ECOS3
108E  D2 00 0F56 0F6E           00694          MVC   ECOS1+1(1),CMP001
1094  D2 01 0F57 0F55           00695 ERW0     MVC   ECOS2,ECOS1
109A  D4 01 0F57 0F5B           00696          NC    ECOS2,ECOMAS
10A0  D5 01 0F57 0F55           00697          CMC   ECOS2,ECOS1
10A6  43 D0 10F0                00698          JNE   ERW5
10AA  92 40 0F4F                00699          MVI   X'40',ECORES
10AE  D4 01 0F57 0F59           00700          NC    ECOS2,ECOS3
10B4  D5 01 0F57 0F55           00701          CMC   ECOS2,ECOS1
10BA  43 D0 10C2                00702          JNE   ERW1
10BE  92 41 0F4F                00703          MVI   X'41',ECORES
10C2  92 50 0F50                00704 ERW1     MVI   X'50',ECORES+1
10C6  D2 01 0F57 0F55           00705          MVC   ECOS2,ECOS1
10CC  D4 01 0F57 0F5D           00706          NC    ECOS2,ECOMAS+2
10D2  D5 01 0F57 0F55           00707          CMC   ECOS2,ECOS1
10D8  43 D0 10E0                00708          JNE   ERW2
10DC  92 AC 0F50                00709          MVI   X'AC',ECORES+1
10E0  D2 04 0216 0EEA           00710 ERW2     MVC   PRINT+20(5),ECOECO
10E6  D2 01 021C 0F4F           00711          MVC   PRINT+26(2),ECORES
10EC  41 F0 0100                00712          JRT   PRNT
10F0  FE 11 0F56 0F56           00713 ERW5     AB    ECOS1,ECOS1
10F6  43 30 1104                00714          JGE   ERW6
10FA  FE 10 10E5 0F48           00715          AB    ERW2(2),ECOSZ-2(1)
1100  43 F0 1094                00716          JU    ERW0
1104  D2 01 10E4 0F4B           00717 ERW6     MVC   ERW2+4(2),ECOECA
110A  92 00 11D3                00718          MVI   X'00',ERW999+7
110E  95 0F 0F60                00719          CMI   X'0F',ECOMAS+5
1112  43 20 11A2                00720          JE    MON800
```

```
1116  95 FF 0F60                00721            CMI    X'FF',ECOMAS+5
111A  43 20 11AC                00722            JE     MON820
111E  92 0A 113B                00723            MVI    X'0A',MON700+1
1122  95 40 02BC                00724            CMI    X'40',LETT
1126  43 20 112E                00725            JE     MON700-12
112A  92 0D 113B                00726            MVI    X'0D',MON700+1
112E  D2 01 1182 0778           00727            MVC    MON725+4(2),OPERA+4
1134  D2 01 07A4 0776           00728            MVC    LUNG(2),OPERA+2
113A  92 00 0F61                00729 MON700     MVI    X'00',CMPMAS+1
113E  41 F0 0100                00730            JRT    PRNT
1142  FF 00 0F61 07DB           00731 MON705     SB     CMPMAS(1),UNO(1)
1148  43 20 113A                00732            JE     MON700
114C  92 00 119B                00733            MVI    X'00',MON730+1
1150  D2 00 117F 07A5           00734            MVC    MON725+1(1),LUNG+1
1156  D5 01 07A4 08F4           00735            CMC    LUNG(2),TREUNO
115C  43 E0 1168                00736            JLE    MON715
1160  92 1F 117F                00737            MVI    X'1F',MON725+1
1164  92 F0 119B                00738            MVI    X'F0',MON730+1
1168  D2 00 1179 117F           00739 MON715     MVC    MON720+1(1),MON725+1
116E  FE 00 1179 1179           00740            AB     MON720-4(1),MON720-4(1)
1174  92 40 0209                00741            MVI    X'40',PRINT+7
1178  D2 00 020A 0209           00742 MON720     MVC    PRINT+8(1),PRINT+7
117E  D8 00 0209 0000           00743 MON725     UPK    PRINT+7(1),0000
1184  FE 10 1183 08F6           00744            AB     MON725(2),TREDUE(1)
118A  FF 10 07A5 08F6           00745            SB     LUNG(2),TREDUE(1)
1190  DC 67 0202 0040           00746            TR     PRINT(104),0064
1196  41 F0 0100                00747            JRT    PRNT
119A  43 00 1142                00748 MON730     NOJ    MON705
119E  43 F0 11CC                00749            JU     ERW999
11A2  D2 01 11C0 08F7           00750 MON800     MVC    MON825+4(2),ALTE
11A8  43 F0 11B2                00751            JU     **10
11AC  D2 01 11C0 07BE           00752 MON820     MVC    MON825+4(2),ALFI
```

```
11B2  92 40 0202                00753            MVI    X'40',PRINT
11B6  D2 46 0203 0202           00754            MVC    PRINT+1(71),PRINT
11BC  D8 23 0202 0000           00755 MON825     UPK    PRINT(36),0000
11C2  DC 67 0202 0040           00756            TR     PRINT(104),0064
11C8  41 F0 0100                00757            JRT    PRNT
11CC  D2 01 0F4D 11FA           00758 ERW999     MVC    ERWW(2),ERWR+2
11D2  43 00 11DA                00759            NOJ    *+8
11D6  41 F0 0188                00760            JRT    JUMP
11DA  92 00 11D3                00761            MVI    X'00',ERW999+7
11DE  95 FF 030C                00762 ERW996     CMI    X'FF',LETT+80
11E2  92 00 030C                00763            MVI    X'00',LETT+80
11E6  43 20 11EE                00764            JE     ERW90
11EA  41 F0 120A                00765            JRT    HLT
11EE  53 80 11FC                00766 ERW90      JSI    ERW94
11F2  02 40                     00767 ERW91      LOFF
11F4  92 00 030B                00768            MVI    X'00',LETT+79
11F8  43 F0 0000                00769 ERWR       JU     0000
11FC  D5 01 11FA 0F4D           00770 ERW94      CMC    ERWR+2(2),ERWW
1202  43 C0 11F8                00771            JL     ERWR
1206  43F0                      00772 ERW99      DC     XL2'43F0'
1208  0000                      00773 RICI       DC     XL2'0000'
120A  D2 01 121C 00FE           00774 HLT        MVC    *+18(2),254
1210  0A 00                     00775            HLT
1212  43 00 0DC0                00776            NOJ    MON920
1216  43 F0 0000                00777            JU     0000
121A  D2 01 1240 00FE           00778 COMPER     MVC    COMPE4+4(2),254
1220  D2 01 122E 00FE           00779            MVC    COMPE1+4(2),254
1226  43 F0 1236                00780            JU     COMPE3
122A  D2 01 1232 0000           00781 COMPE1     MVC    COMPE2+2(2),0000
1230  D2 00 0000 02B9           00782 COMPE2     MVC    0000(1),UDISC1
1236  FE 10 122F 08E1           00783 COMPE3     AB     COMPE1(2),DUE
123C  D5 01 122E 0000           00784 COMPE4     CMC    COMPE1+4(2),0000
1242  43 D0 122A                00785            JNE    COMPE1
1246  D2 01 124E 122E           00786            MVC    COMPE5+2(2),COMPE1+4
```

```
124C  43 F0 0000                 00787 COMPE5     JU      0000
                                 00788            *       SEEK ROUTINE

1250  D2 01 13B4 00FE            00790 POSIVE     MVC     POVE98+2(2),254
1256  D2 01 126C 00FE            00791            MVC     *+22(2),254
125C  FE 10 13B5 1694            00792            AB      POVE98(2),PARAM4(1)
1262  D2 00 171D 171B            00793            MVC     POVE05(1),POVE00+2
1268  D2 02 1719 0000            00794            MVC     POVE00(3),0
126E  DA 00 171C 02ED            00795            PK      POVE00+3(1),LETT+49
1274  FE 00 171C 171C            00796            AB      POVE00(1),POVE00(1)
127A  FE 00 171C 171C            00797            AB      POVE00(1),POVE00(1)
1280  FE 00 171C 171C            00798            AB      POVE00(1),POVE00(1)
1286  D2 02 171E 1719            00799            MVC     POVE06(3),POVE00
128C  D2 00 1726 16C4            00800 POVE10     MVC     POHEA1(1),POHEAD+1
1292  9E                         00801            DC      XL1'9E'
1293  00                         00802 UDISK      DC      XL1'00'
1294  16A6                       00803            DC      AL2(POSIZI)
1296  43 00 13B2                 00804            NOJ     POVE98
129A  41 F0 152A                 00805            JRT     REFUS1
129E  9E 00 169C                 00806 POVE49     PER     X'00',POTESE
12A2  43 10 13B6                 00807            JG      POVE40
12A6  D2 01 16BB 171B            00808 POVE16     MVC     POINDR+1(2),POVE00+2
12AC  92 04 16BA                 00809            MVI     X'04',POINDR
12B0  FE 22 16BC 16BC            00810            AB      POINDR(3),POINDR(3)
12B6  9E 00 16B4                 00811 POVE50     PER     X'00',POINDI
12BA  41 F0 152A                 00812            JRT     REFUS1
12BE  9E 00 16BD                 00813 POVE51     PER     X'00',POLEGE
12C2  9E 00 169E                 00814 POVE52     PER     X'00',POMARE
12C6  43 20 12E6                 00815            JE      POVE17-4
12CA  02 80                      00816            LON
12CC  41 F0 15CE                 00817            JRT     SW1A
```

```
12D0  43 F0 13D8                00818            JU      POVE35
12D4  41 F0 164C                00819            JRT     STEPS
12D8  D2 07 0216 16F6           00820            MVC     PRINT+20(8),MARET
12DE  41 F0 15F0                00821            JRT     SW1Z
12E2  43 F0 13D8                00822            JU      POVE35
12E6  41 F0 152A                00823            JRT     REFUS1
12EA  D5 00 171B 16C4           00824 POVE17     CMC     POVE00+2(1),POHEAD+1
12F0  43 D0 130C                00825            JNE     POVE18
12F4  02 40                     00826            LOFF
12F6  41 F0 15CE                00827            JRT     SW1A
12FA  43 F0 1346                00828            JU      POVE69
12FE  D5 00 171B 1720           00829            CMC     POVE00+2(1),POVE06+2
1304  43 D0 1346                00830            JNE     POVE69
1308  43 F0 13AE                00831            JU      POVE30
130C  02 80                     00832 POVE18     LON
130E  41 F0 15CE                00833            JRT     SW1A
1312  43 F0 1346                00834            JU      POVE69
1316  41 F0 164C                00835            JRT     STEPS
131A  D2 0C 020C 1764           00836            MVC     PRINT+10(13),POERRO
1320  D2 13 0229 1750           00837            MVC     PRINT+39(20),POSTEP+29
                                00838            *BID7   POHEAD+1,PRINT+44,PARAM1
1326  41 F0 050C                                 JRT     YBID7
132A  16C4                                       DC      AL2(POHEAD+1)
132C  022E                                       DC      AL2(PRINT+44)
132E  1691                                       DC      AL2(PARAM1)
                                00839            *BID7   POHEAD+2,PRINT+56,PARAM2
1330  41 F0 050C                                 JRT     YBID7
1334  16C5                                       DC      AL2(POHEAD+2)
1336  023A                                       DC      AL2(PRINT+56)
1338  1692                                       DC      AL2(PARAM2)
133A  92 50 023A                00840            MVI     X'50',PRINT+56
133E  41 F0 15F0                00841            JRT     SW1Z
1342  43 F0 1346                00842            JU      POVE69
1346  D5 00 171B 171D           00843 POVE69     CMC     POVE00+2(1),POVE05
```

```
134C  92 00 171A                00844            MVI    X'00',POVE00+1
1350  43 D0 137C                00845            JNE    POVE80
1354  92 01 1719                00846            MVI    X'01',POVE00
1358  D2 00 171B 1720           00847            MVC    POVE00+2(1),POVE06+2
135E  D2 00 1721 1720           00848            MVC    T00S00(1),POVE06+2
1364  FF 00 1721 16C4           00849            SB     T00S00(1),POHEAD-1(1)
136A  43 10 13A4                00850            JG     POVE95
136E  92 00 1719                00851            MVI    X'00',POVE00
1372  FF 00 171A 1721           00852            SB     POVE00-2(1),T00S00(1)
1378  43 F0 128C                00853            JU     POVE10
137C  92 01 1719                00854 POVE80     MVI    X'01',POVE00
1380  D2 00 1721 171D           00855            MVC    T00S00(1),POVE05
1386  D2 00 171B 171D           00856            MVC    POVE00+2(1),POVE05
138C  FF 00 1721 16C4           00857            SB     T00S00(1),POHEAD-1(1)
1392  43 10 13A4                00858            JG     POVE95
1396  92 00 1719                00859            MVI    X'00',POVE00
139A  FF 00 171A 1721           00860            SB     POVE00-2(1),T00S00
13A0  43 F0 128C                00861            JU     POVE10
13A4  D2 00 171A 1721           00862 POVE95     MVC    POVE00+1(1),T00S00
13AA  43 F0 128C                00863            JU     POVE10
13AE  92 F0 15D5                00864 POVE30     MVI    X'F0',SW1A+7
13B2  43 F0 0000                00865 POVE98     JU     0000
13B6  02 80                     00866 POVE40     LON
13B8  D2 01 17AA 17DA           00867            MVC    WAIT(2),ATT
13BE  41 F0 17B6                00868            JRT    SUBWAY
13C2  41 F0 15CE                00869            JRT    SW1A
13C6  43 F0 13D8                00870            JU     POVE35
13CA  41 F0 164C                00871            JRT    STEPS
13CE  D2 07 0216 16FE           00872            MVC    PRINT+20(8),TESET
13D4  41 F0 15F0                00873            JRT    SW1Z
13D8  41 F0 13F0                00874 POVE35     JRT    REHOME
13DC  92 01 1719                00875            MVI    X'01',POVE00
```

```
13E0  D2 00 171A 171D     00876     MVC    POVE00+1(1),POVE05
13E6  D2 00 171B 171D     00877     MVC    POVE00+2(1),POVE05
13EC  43 F0 128C          00878     JU     POVE10
```

```
                                 00880          *      RETURN TO HOME ROUTINE

13F0  D2 01 14A0 00FE            00882 REHOME   MVC    REHO90+2(2),254
13F6  D2 00 1726 16C4            00883          MVC    POHEA1(1),POHEAD+1
13FC  D7 01 171A 171A            00884          XC     POVE00+1(2),POVE00+1
1402  9E 00 16D8                 00885          PER    X'00',RESET
1406  9E 00 16DC                 00886          PER    X'00',RETHOM
140A  43 00 149E                 00887 REHOM3   NOJ    REHO90
140E  41 F0 1552                 00888          JRT    REFUS2
1412  9E 00 169C                 00889          PER    X'00',POTESE
1416  43 20 1438                 00890          JE     REHOM1
141A  02 80                      00891          LON
141C  D2 01 17AA 17DA            00892          MVC    WAIT(2),ATT
1422  41 F0 17B6                 00893          JRT    SUBWAY
1426  41 F0 160E                 00894          JRT    SW1B
142A  41 F0 14A2                 00895          JRT    STUMP
142E  D2 07 0216 16FE            00896          MVC    PRINT+20(8),TESET
1434  43 F0 162A                 00897          JU     SW1V
1438  9E 00 16C6                 00898 REHOM1   PER    X'00',READDR
143C  41 F0 1552                 00899          JRT    REFUS2
1440  9E 00 16BD                 00900          PER    X'00',POLEGE
1444  9E 00 169E                 00901          PER    X'00',POMARE
1448  43 20 1464                 00902          JE     REHOM2-4
144C  02 80                      00903          LON
144E  9E 00 16D8                 00904          PER    X'00',RESET
1452  41 F0 160E                 00905          JRT    SW1B
1456  41 F0 14A2                 00906          JRT    STUMP
145A  D2 07 0216 16F6            00907          MVC    PRINT+20(8),MARET
1460  43 F0 162A                 00908          JU     SW1V
1464  41 F0 1552                 00909          JRT    REFUS2
1468  95 00 16C4                 00910 REHOM2   CMI    X'00',POHEAD+1
```

```
146C  43 20 1494          00911          JE      REH090-10
1470  02 80               00912          LON
1472  41 F0 160E           00913          JRT     SW1B
1476  41 F0 14A2           00914          JRT     STUMP
147A  D2 0B 020C 1764      00915          MVC     PRINT+10(12),POERRO
1480  D2 03 021B 1744      00916          MVC     PRINT+25(4),POSTEP+17
                           00917          *BID7   POHEAD+1,PRINT+30,PARAM1
1486  41 F0 050C                          JRT     YBID7
148A  16C4                                DC      AL2(POHEAD+1)
148C  0220                                DC      AL2(PRINT+30)
148E  1691                                DC      AL2(PARAM1)
1490  43 F0 162A           00918          JU      SW1V
1494  02 40               00919          LOFF
1496  41 F0 160E           00920          JRT     SW1B
149A  92 F0 1615           00921          MVI     X'F0',SW1B+7
149E  43 F0 0000           00922 REH090   JU      0000
14A2  D2 01 14BE 00FE      00923 STUMP    MVC     STUMP9+2(2),254
14A8  D2 1D 020C 178C      00924          MVC     PRINT+10(30),ERRRET
                           00925          *BID7   POHEA1,PRINT+40,PARAM1
14AE  41 F0 050C                          JRT     YBID7
14B2  1726                                DC      AL2(POHEA1)
14B4  022A                                DC      AL2(PRINT+40)
14B6  1691                                DC      AL2(PARAM1)
14B8  41 F0 0100           00926          JRT     PRNT
14BC  43 F0 0000           00927 STUMP9   JU      0000
```

```
                                 00930          *      REPEATED SEEKS ROUTINE

14C0  D2 01 1528 00FE            00932 CATEP0   MVC    CATEP9+2(2),254
14C6  92 00 1721                 00933          MVI    X'00',T00S00
14CA  FE 10 1529 1694            00934          AB     CATEP9(2),PARAM4(1)
14D0  D2 01 14DA 00FE            00935          MVC    CATEP1+4(2),254
14D6  D2 03 1722 0000            00936 CATEP1   MVC    CATEPS(4),0000
14DC  D2 01 150C 1722            00937          MVC    CATEP4+26(2),CATEPS
14E2  D2 00 14F7 1725            00938          MVC    CATEP4+5(1),CATEPS+3
14E8  D2 00 14F8 1725            00939          MVC    CATEP4+6(1),CATEPS+3
14EE  41 F0 13F0                 00940          JRT    REHOME
14F2  41 F0 1250                 00941 CATEP4   JRT    POSIVE
14F6  01000000                   00942          DC     XL4'01000000'
14FA  D2 00 150E 1724            00943          MVC    CATEP4+28(1),CATEPS+2
1500  53 40 1508                 00944          JS2    *+8
1504  43 F0 1526                 00945          JU     CATEP9
1508  41 F0 1250                 00946          JRT    POSIVE
150C  01000000                   00947          DC     XL4'01000000'
1510  D7 00 150C 1691            00948          XC     CATEP4+26(1),PARAM1
1516  D2 00 1724 1725            00949          MVC    CATEPS+2(1),CATEPS+3
151C  D2 00 1725 150E            00950          MVC    CATEPS+3(1),CATEP4+28
1522  43 F0 14FA                 00951          JU     CATEP4+8
1526  43 F0 0000                 00952 CATEP9   JU     0000
```

```
                                00954          *       CAPET ERCAT ROUTINES

152A  D2 01 1536 00FE           00956 REFUS1   MVC     *+12(2),254
1530  41 F0 1572                00957          JRT     ERCAPE
1534  43 20 0000                00958          JE      0000
1538  02 80                     00959          LON
153A  41 F0 15CE                00960          JRT     SW1A
153E  43 F0 13D8                00961          JU      POVE35
1542  41 F0 164C                00962          JRT     STEPS
1546  41 F0 159A                00963          JRT     CAPERC
154A  41 F0 15F0                00964          JRT     SW1Z
154E  43 F0 13D8                00965          JU      POVE35

1552  D2 01 155E 00FE           00967 REFUS2   MVC     *+12(2),254
1558  41 F0 1572                00968          JRT     ERCAPE
155C  43 20 0000                00969          JE      0000
1560  02 80                     00970          LON
1562  41 F0 160E                00971          JRT     SW1B
1566  41 F0 14A2                00972          JRT     STUMP
156A  41 F0 159A                00973          JRT     CAPERC
156E  43 F0 162A                00974          JU      SW1V

1572  D2 01 1598 00FE           00976 ERCAPE   MVC     ERCAP9+2(2),254
1578  9E 00 16A0                00977          PER     X'00',CAPE
157C  43 20 1584                00978          JE      *+8
1580  92 01 1716                00979          MVI     X'01',CAER
1584  9E 00 16A4                00980          PER     X'00',ERCA2
1588  43 20 1590                00981          JE      *+8
158C  92 01 1717                00982          MVI     X'01',CAER+1
```

```
1590  D5 01 1716 168C        00983            CMC    CAER,ZERO
1596  43 F0 0000             00984 ERCAP9     JU     0000

159A  D2 01 15CC 00FE        00986 CAPERC     MVC    CAPER9+2(2),254
15A0  95 01 1716             00987            CMI    X'01',CAER
15A4  43 D0 15B2             00988            JNE    **14
15A8  D2 07 0216 16E6        00989            MVC    PRINT+20(8),CAPET
15AE  41 F0 0100             00990            JRT    PRNT
15B2  95 01 1717             00991            CMI    X'01',CAER+1
15B6  43 D0 15C4             00992            JNE    **14
15BA  D2 07 0216 16EE        00993            MVC    PRINT+20(8),ERCAT
15C0  41 F0 0100             00994            JRT    PRNT
15C4  D7 01 1716 1716        00995            XC     CAER,CAER
15CA  43 F0 0000             00996 CAPER9     JU     0000
```

```
                                 00998            *      RECYCLE CONTROL ROUTINES
15CE  D2 01 15E4 00FE            00999 SW1A       MVC    SW1AND+2(2),254
15D4  43 F0 15DC                 01000            JU     *+8
15D8  53 80 15E6                 01001            JS1    SW1AND+4
15DC  FE 10 15E5 1694            01002            AB     SW1AND(2),PARAM4(1)
15E2  43 F0 0000                 01003 SW1AND     JU     0000
15E6  D7 01 1716 1716            01004            XC     CAER,CAER
15EC  43 F0 15E2                 01005            JU     SW1AND
15F0  D2 01 1608 00FE            01006 SW1Z       MVC    SW1NOR+2(2),254
15F6  41 F0 0100                 01007            JRT    PRNT
15FA  41 F0 0188                 01008            JRT    JUMP
15FE  92 00 15D5                 01009            MVI    X'00',SW1A+7
1602  41 F0 120A                 01010            JRT    HLT
1606  53 80 0000                 01011 SW1NOR     JS1    0000
160A  43 F0 0E32                 01012            JU     MON000

160E  D2 01 161E 00FE            01014 SW1B       MVC    SW1UND+2(2),254
1614  43 F0 161C                 01015            JU     *+8
1618  53 80 1620                 01016            JS1    SW1UND+4
161C  43 F0 0000                 01017 SW1UND     JU     0000
1620  D7 01 1716 1716            01018            XC     CAER,CAER
1626  43 F0 13F6                 01019            JU     REHOME+6
162A  41 F0 0100                 01020 SW1V       JRT    PRNT
162E  D2 1A 020C 1771            01021            MVC    PRINT+10(27),REWARN
1634  41 F0 0100                 01022            JRT    PRNT
1638  41 F0 0188                 01023            JRT    JUMP
163C  92 00 1615                 01024            MVI    X'00',SW1B+7
1640  41 F0 120A                 01025            JRT    HLT
1644  53 80 13F6                 01026 SW1NUR     JS1    REHOME+6
1648  43 F0 0E32                 01027            JU     MON000
```

```
164C  D2 01 168A 00FE   01029 STEPS   MVC    STEPS9+2(2),254
1652  D2 30 020C 1733   01030         MVC    PRINT+10(49),POSTEP
                        01031         *BID7  POVE00+1,PRINT+12,PARAM1
1658  41 F0 050C                      JRT    YBID7
165C  171A                            DC     AL2(POVE00+1)
165E  020E                            DC     AL2(PRINT+12)
1660  1691                            DC     AL2(PARAM1)
                        01032         *BID7  POHEA1,PRINT+32,PARAM1
1662  41 F0 050C                      JRT    YBID7
1666  1726                            DC     AL2(POHEA1)
1668  0222                            DC     AL2(PRINT+32)
166A  1691                            DC     AL2(PARAM1)
                        01033         *BID7  POVE00+2,PRINT+44,PARAM1
166C  41 F0 050C                      JRT    YBID7
1670  171B                            DC     AL2(POVE00+2)
1672  022E                            DC     AL2(PRINT+44)
1674  1691                            DC     AL2(PARAM1)
                        01034         *BID7  POVE00+3,PRINT+56,PARAM2
1676  41 F0 050C                      JRT    YBID7
167A  171C                            DC     AL2(POVE00+3)
167C  023A                            DC     AL2(PRINT+56)
167E  1692                            DC     AL2(PARAM2)
1680  92 50 023A        01035         MVI    X'50',PRINT+56
1684  41 F0 0100        01036         JRT    PRNT
1688  43 F0 0000        01037 STEPS9  JU     0000
```

```
168C  0000                    01040 ZERO     DC    XL2'0000'
168E  000001                  01041 ZERO2    DC    XL3'000001'
1691  01                      01042 PARAM1   DC    XL1'01'
1692  02                      01043 PARAM2   DC    XL1'02'
1693  03                      01044 PARAM3   DC    XL1'03'
1694  04                      01045 PARAM4   DC    XL1'04'
1695  08                      01046 PARAM8   DC    XL1'08'
1696  09                      01047 PARAM9   DC    XL1'09'
1697  10                      01048 PARA16   DC    XL1'10'
1698  20                      01049 PARA20   DC    XL1'20'
1699  F8                      01050 EFFE8    DC    XL1'F8'
169A  C02E                    01051 TOP001   DC    XL2'C02E'
169C  C012                    01052 POTESE   DC    XL2'C012'
169E  C014                    01053 POMARE   DC    XL2'C014'
16A0  C01E                    01054 CAPE     DC    XL2'C01E'
16A2  C040                    01055 ERCA1    DC    XL2'C040'
16A4  C042                    01056 ERCA2    DC    XL2'C042'
16A6  50 4A 0001 1719         01057 POSIZI   DP    X'50',X'4A',POVE00(2)
16AC  50 4A 0001 16B2         01058 POSAV    DP    X'50',X'4A',POSAVA(2)
16B2  0101                    01059 POSAVA   DC    XL2'0101'
16B4  50 46 0002 16BA         01060 POINDI   DP    X'50',X'46',POINDR(3)
16BA  040000                  01061 POINDR   DC    XL3'040000'
16BD  10 40 0002 16C3         01062 POLEGE   DP    X'10',X'40',POHEAD(3)
16C3  000000                  01063 POHEAD   DC    XL3'000000'
16C6  50 46 0002 16CC         01064 READDR   DP    X'50',X'46',READD1(3)
16CC  080000                  01065 READD1   DC    XL3'080000'
16CF  10 40 0002 16D5         01066 RELEGE   DP    X'10',X'40',POHEAR(3)
16D5  000000                  01067 POHEAR   DC    XL3'000000'
16D8  8045                    01068 RESET    DC    XL2'8045'
16DA  809F                    01069 AVSEL    DC    XL2'809F'
```

```
16DC  8047                    01070 RETHOM    DC    XL2'8047'
16DE  A7554040B35040AC        01071 PEOOT     DC    CL8'PEOOT 0*'
16E6  5351A755B35040AC        01072 CAPET     DC    CL8'CAPET 0*'
16EE  55A95351B35040AC        01073 ERCAT     DC    CL8'ERCAT 0*'
16F6  A451A955B35040AC        01074 MARET     DC    CL8'MARET 0*'
16FE  B355B255B35040AC        01075 TESET     DC    CL8'TESET 0*'
1706  5557A6A3B35040AC        01076 EGOLT     DC    CL8'EGOLT 0*'
170E  B2555755B35040AC        01077 SEGET     DC    CL8'SEGET 0*'
1716  0000                    01078 CAER      DC    XL2'0000'
1718                          01079 PARAMS    DS    L1
1719  00000000                01080 POVE00    DC    XL4'00000000'
171D  00                      01081 POVE05    DC    XL1'00'
171E  000000                  01082 POVE06    DC    XL3'000000'
1721                          01083 TOOS00    DS    L1
1722                          01084 CATEPS    DS    L4
1726  00                      01085 POHEA1    DC    XL1'00'
1727  070007000700070          01086 NOP       DC    XL12'070007000700070007000700'
      07000700

1733  A55B50505050B2B3        01087 POSTEP    DC    CL29'N.    STEPS FROM CY.N.    TO '
      55A7B25056A9A6A4   5053B85BA55B5050   5050B3A650

1750  53B85BA55B505050         01088           DC    CL20'CY.N.     HEAD N.   '
      505058555154 50A5  5B505050

1764  55A9A9A6A95B5056         01089 POERRO    DC    CL13'ERROR. FOUND:'
      A6B4A5544D

1771  595650B2B641BBA9         01090 REWARN    DC    CL27'IF SW1,RET.TO HOME IN CYCLE'
      55B35BB3A65058A6   A4555059A55053B8   53A355

178C  55A9A95B5059A550         01091 ERRRET    DC    CL30'ERR. IN RET.TO HOME FROM CY.N.'
      A955B35BB3A65058   A6A4555056A9A6A4   5053B85BA55B
```

```
17AA
17AC
17AE  01
17B0  D2 01 17AA 17AC  P
17B6  D2 01 17D8 00FE
17BC  02 20
17BE  D2 00 17C5 02B8
17C4  D2 00 0000 0000
17CA  FF 10 17AB 17AE
17D0  43 10 17B6
17D4  02 10
17D6  43 F0 0000
17DA  0200
17DC
001E                   M
001E  093A

      43 F0 0FDC
```

```
01092 WAIT      DS     L2
01093 WATT      DS     L2
01094 WAIT01    DC     XL1'01'
01095 SUBWAT    MVC    WAIT,WATT
01096 SUBWAY    MVC    WAITZ+2(2),254
01097           INS
01098           MVC    WAIT1+1(1),TEMUC
01099 WAIT1     MVC    0000(01),0000
01100           SB     WAIT(2),WAIT01(1)
01101           JG     SUBWAY
01102           ENS
01103 WAITZ     JU     0000
01104 ATT       DC     XL2'0200'
01105 FIELD     DS     12L240
01106           ORG    30
01107           DC     AL2(START2)
01108           *      4T4720709EA0 4720710Y DISC MONITOR D157
01109           END    START
```